Cabinets

häwa

Well Conceived

The häwa group has established itself as an innovative and highly competent supplier to machinery and facility equipment companies in the electrical and electronic industries, far beyond the borders of Europe.
We develop and deliver standard and custom solutions for a great variety of applications - using solid construction and economical designs.

Our many decades of experience in the enclosure business, together with close cooperation with end users, guarantee optimal benefits for our customers. Our comprehensive services range from initial discussions and concept development, to design, construction, assembly, and finally, detailed logistical support.
We create value-added solutions for our customers through problem solving and reliable partnerships during the development.
'Made in Germany' is the yardstick in quality for us.
We are a highly motivated and qualified team of over 400 associates who together with our exclusive business partners serve an ever increasing range of international customers.

Cabinets Systems	Free Standing and Modular Cabinets in Steel and Stainless Steel, PC Cabinets
IT Solutions	Server and Distribution Racks, Cabinets and Enclosures
Enclosures	Wall Mount Enclosures, Junction Boxes and Small Housings in Steel, Stainless Steel, Plastic and Aluminum
Fire Protection	Safety in Steel: Maintaining Function and Escape Safety
Thermal Components	Heating, Ventilating and Cooling
Cable Ducts, Accessories	Enclosed Cable Ducts, Complete Cabinet Accessories
X-Frame	Machine enclosures, machine frames
Tools	Portable Tools, Shop Equipment and Factory Automation

Content

häwa

Cabinets

General information	page
Sheet steel	4-7
Stainless steel	8-43
	44-61

Sanitary IP69K Cabinet H450

General information	page
Stainless steel	62-63
	64-69

PC Cabinets

General information	page
Sheet steel	70-71
	72-77

Consoles

General information	page
Sheet steel	78-79
	80-85

Flange Mounted Disconnect

General information	page
master/slave cabinet systems	86-89
	90-91

Accessories

General information	page
Accessories Sheet steel internal	92-93
Accessories Stainless steel outside	94-117
Accessories universal internal	118-126
Accessories Distribution Cabinet	127-193
Accessories Sanitary IP69K Cabinet	194-195
Accessories PC-Cabinet	196-197
Accessories Consoles	199-207
	208-210

Free-Standing Cabinets

Convenient installation, flexible adaptation

For single cabinet applications the häwa H390 / H370 cabinets are your prime choice.
A huge variety of available sizes along with the structural load capacity you are expecting from a häwa cabinet distinguish this line.
Doors, cabinet top and bottom design, as well as the adjustable mounting plates are identical in construction to the modular häwa cabinet range H395 / H375.
The stainless steel cabinet H370 achieves protection class IP 56 (NEMA 12) for single and double door construction; the powder-coated equivalent achieves IP 55 (NEMA 12).

The free-standing cabinets are designed to be fully compatible with the accessories of the modular cabinet range H395 / H375 and have a standard maximum size of 2000 x 2000 x 600 mm.
This significantly expands the field of application for free-standing cabinets and results in an increased benefit to our customers.

Technical parameters

- Stainless steel version with protection class IP 56 per DIN EN 60529 (NEMA 12)
- Mild steel powder-coated version with protection class IP 55 per DIN EN 60529 (NEMA 12).
- Grounding per DIN EN 60439-4
- Flanged edges form rain gutter and prevent dust and water from entering the cabinet
- Doors with seamless foamed-in gasket can be mounted at left or right side. Includes bolted reinforcement and attachment frame of solid square tube perforated every 25 mm (1”).
- Standard delivery includes doors hinged on right side
- UL listed

- 120° hidden hinges are standard;180° hinges are available as an option
- 4-point locking bar for single door cabinets, 3-point locking bar for overlapping double door design
- Standard lock is 0.12” double mandrel bolt. Interchangeable with various internationally known lock types
- Removable top
- 4 lifting eyes M12 per DIN 580
- Bottom with three-part divided cable entry plates for increaded flexibility.
- Quick, safe and easy mounting with häwa locking brackets. Adjustable to depth every 25 mm (1”).
- Surface:
  H390: Mild steel with improved pretreatment through iron phosphate solution and passivation free from chromium, and with Epoxy-Polyester powder coating, textured.
- Salt spray test per DIN 50021 for 500 hours
- Approved for outside applications – depending on requirements of application. Direct sun light should be avoided.
- H370: Stainless steel 1.4301 (304), externally brushed

Modular Cabinets

Great flexibility with many clever details

The modular cabinet series H395 / H375 in powder coated steel or 1.4301 (304) stainless steel offers solutions for everyone.

Benefits for our users:
- Quick: Versatile flexibility without assembly
- Easy: Clearly laid out options & accessories
- High value: Meaningful standard offering with flexible customizations

For special applications we offer:
- Seismic cabinets up to zone 4 per GR-63-Core and UBC (Catalog H28-0/60)
- PC-cabinets type 2096
- Clean room and hygiene applications with protection class IP 66/69K

Our consultants are eager to help!

Your cabinets from häwa are:

Sturdy:
- The stable, torsion resistant frame is made of welded multi-flanged members.
- Load capacity up to 1400 kg (3100 lbs), independent of weight distribution or addition of extra support rails

Convenient:
- Galvanized mounting plate, adjustable to depth every 25 mm (1”). Quick, safe and easy mounting via häwa locking brackets.

Flexible:
- A three-dimensional continuous tubular frame with square and round perforations every 25 mm (1”) assures optimum internal mounting options.
- Doors with bolted reinforcement and attachment frame of solid square tube perforated every 25 mm (1”).

Smart:
- Removable top with 4 x M12 lifting eyes per DIN 580.
- Ground studs available on all movable or detachable parts, as well as bottom and top frame areas
- Solid base construction designed for direct mounting of castors, leveling feet or bases. The three-part, adju stable base plate, prepared for rubber clamps, enables simple cable entry and modifications.
- Protection class IP 55 (NEMA 12) as single or modular unit with single or double door design.
- Excellent and environmentally responsible surface protection with improved pretreatment through iron phosphate solution and passivation free from chromium. Finish with a textured Epoxy-Polyester powder coating.
  With salt spray test per DIN 50021 for 500 hours. Approved for outside applications – depending on require ments of application. Direct sun light should be avoided.
- Lock and hinges for H375 models complete from stainless steel
- Hidden, 120 ° easy lift-off hinges designed for one-person handling. 180° hinges available as option.
- Modular assembly can be executed by directly bolting cabinets together or using joining brackets – depending on application.

häwa

Technical parameters

- Protection class IP 55 per DIN EN 60529 (NEMA 12)
- All sizes can be converted to IP 56
- Grounding per DIN EN 60439-1
- Stable, torsion resistant frame made of welded multi-flanged members
- Three-dimensional continuous tubular frame with square and round perforations every 25 mm (1”) for optimum internal mounting options
- Flanged edges form rain gutter and prevent dust and water from entering the cabinet
- Doors with seamless foamed-in gasket can be mounted at left or right side
- Standard delivery includes doors hinged on right side
- 120° hidden hinges are standard;180° hinges are available as an option
- Doors with bolted reinforcement and attachment frame of solid square tube perforated every 25 mm (1”)
- 4-point locking bar for single door cabinets, 3-point locking bar for overlapping double door design.
- Standard lock is 0.12” double mandrel bolt. Can be exchanged with various internationally known lock types
- Outer back panel removable; scre wed from outside
- Removable top
  4 lifting eyes M12 per DIN 580
- Bottom with three-part divided cable entry plates for increased flexibility.
- Quick, safe and easy mounting via häwa locking brackets. Adjustable to depth every 25 mm (1”).
- Surface:
  H390: Mild steel with improved pretreatment through iron phosphate solution and passivation free from chromium, and with Epoxy-Polyester powder coating, textured.
  Salt spray test per DIN 50021 for 500 hours
- Approved for outside applications – depending on requirements of application. Direct sun light should be avoided.
  H370: Stainless steel 1.4301 (304), externally brushed

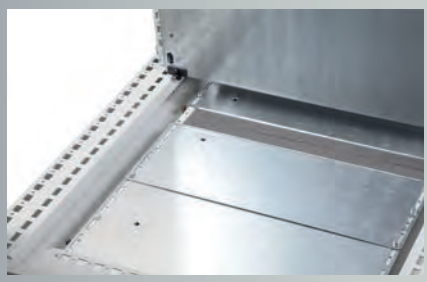

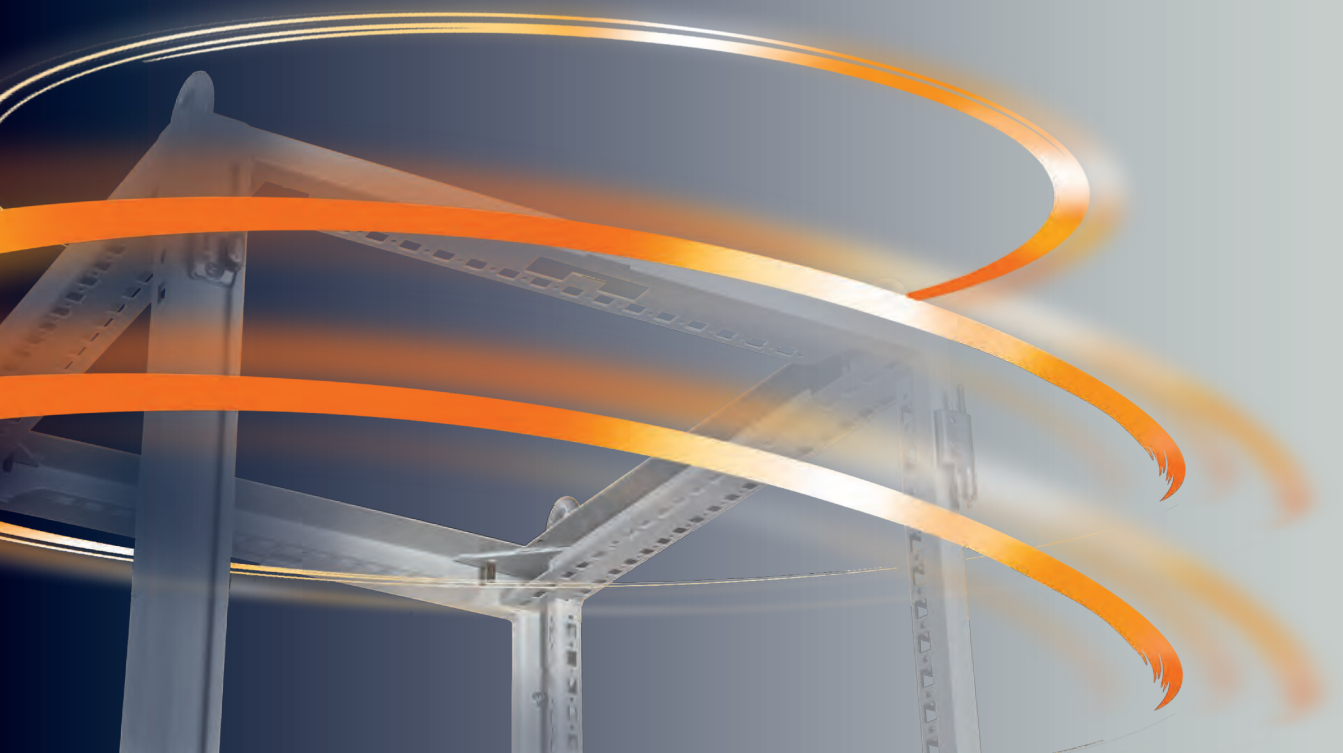

Free-Standing cabinets H390, D-15.75“

Features
- Free-standing
- User-friendly characteristics
- Customizable through a variety of options

Product Description
Free-standing cabinets with single or double door design. Available with or without mounting plate. Mounting rails for utilization of häwa accessories available as option.
- Grounding per DIN EN 60439-1, grounding studs M8x20 on all moving and removable parts, as well as top and bottom panels.
- Flanged edges form rain gutter and prevent dust and water from entering the cabinet
- Doors with foamed gaskets; can be mounted at right or left side – standard is right side
- 120° hidden hinges, which can be easily exchanged with 180° hinges
- Locking with 3 mm double mandrel bolt
- With bolted reinforcement and attachment frame of solid square tubes perforated with 4.5 mm holes every 25 mm
- Top plate can be removed; 4 transport lugs M12 per DIN 580:2003-08
- Bottom with three-part , adjustable base plate and mounting holes 10.6 mm
- Mounting plates adjustable to depth every 25 mm. Quick and easy mounting via häwa locking brackets
- Excellent surface finish protection with improved pretreatment of the sheet metals by iron phosphatization and chrome-free repassivation as well as pollution free powder coating

Technical Data
- Depth=15.75“
- Material: Sheet steel
- Surface finish: Powder coated RAL 7035
- Metal thickness door: 2 mm; 14 ga
- Metal thickness frame: 1.5 mm; 16 ga
- Metal thickness rear wall: 1.5 mm; 16 ga
- Approvals: cULus
- Protection type: IP55

Further technical information ➜ page 9

Scope of Delivery
- Cabinet complete with lifting eyes, top and bottom cable entry plates and one key.

Note
Hinged door on back and other modifications available. Please check with your häwa representative for updated price and delivery time.
Attention: Center attachment 0391-0003-..-00 can not be combined with vertical mounting rails 0391-90..-00-03. Cabinet space is utilized by means of horizontal and vertical mounting rails. For width 1600/2000 two sets of horizontal mounting rails are required.

Accessories
- Mounting kits for grounding straps ➜ page 10
- Bases height 7.87“ ➜ page 10
- Base height 7.87“ only for H390 Cabinets ➜ page 10
- Bases height 3.94“ for H390 and H395 ➜ page 10
- Center attachment for H370/H390 ➜ page 11
- Horizontal assembly rail ➜ page 11
- Vertical mounting rail ➜ page 11

Dimensions (WxHxD)		Metal thickness Mounting plate		Weight		**Order No.**	
mm	inch	mm	ga	kg	lbs	**without mounting plate**	**with mounting plate**
600 x 1.600 x 400	23,62 x 62,99 x 15,75	2,5	12	67,5	148,84	**0390-6016-40-07**	
600 x 1.600 x 400	23,62 x 62,99 x 15,75	2,5	12	84	185,22		**0390-6016-40-17**
600 x 1.800 x 400	23,62 x 70,87 x 15,75	2,5	12	73	160,96	**0390-6018-40-07**	
600 x 1.800 x 400	23,62 x 70,87 x 15,75	2,5	12	92	202,86		**0390-6018-40-17**
600 x 2.000 x 400	23,62 x 78,74 x 15,75	2,5	12	79,5	175,3	**0390-6020-40-07**	
600 x 2.000 x 400	23,62 x 78,74 x 15,75	2,5	12	101	222,7		**0390-6020-40-17**
800 x 1.600 x 400	31,5 x 62,99 x 15,75	2,5	12	80,5	177,5	**0390-8016-40-07**	
800 x 1.600 x 400	31,5 x 62,99 x 15,75	2,5	12	104	229,32		**0390-8016-40-17**
800 x 1.800 x 400	31,5 x 70,87 x 15,75	2,5	12	87,5	192,94	**0390-8018-40-07**	
800 x 1.800 x 400	31,5 x 70,87 x 15,75	2,5	12	114	251,37		**0390-8018-40-17**
800 x 2.000 x 400	31,5 x 78,74 x 15,75	2,5	12	94,5	208,37	**0390-8020-40-07**	
800 x 2.000 x 400	31,5 x 78,74 x 15,75	2,5	12	124	273,42		**0390-8020-40-17**
1.000 x 1.800 x 400	39,37 x 70,87 x 15,75	3	11	102	224,91	**0390-1018-40-07**	
1.000 x 1.800 x 400	39,37 x 70,87 x 15,75	3	11	142	313,11		**0390-1018-40-17**

häwa

Dimensions (WxHxD)		Metal thickness Mounting plate		Weight		Order No.	
						without mounting plate	**with mounting plate**
mm	inch	mm	ga	kg	lbs		
1.000 x 2.000 x 400	39,37 x 78,74 x 15,75	3	11	110,5	243,65	**0390-1020-40-07**	
1.000 x 2.000 x 400	39,37 x 78,74 x 15,75	3	11	155	341,78		**0390-1020-40-17**
1.200 x 1.800 x 400	47,24 x 70,87 x 15,75	3	11	122	269,01	**0390-1218-40-07** [1]	
1.200 x 1.800 x 400	47,24 x 70,87 x 15,75	3	11	170	374,85		**0390-1218-40-17** [1]
1.200 x 2.000 x 400	47,24 x 78,74 x 15,75	3	11	134,5	296,57	**0390-1220-40-07** [1]	
1.200 x 2.000 x 400	47,24 x 78,74 x 15,75	3	11	188	414,54		**0390-1220-40-17** [1]
1.600 x 1.800 x 400	62,99 x 70,87 x 15,75	3	11	156,5	345,08	**0390-1618-40-07** [1]	
1.600 x 1.800 x 400	62,99 x 70,87 x 15,75	3	11	228	502,74		**0390-1618-40-17** [1]
1.600 x 2.000 x 400	62,99 x 78,74 x 15,75	3	11	170	374,85	**0390-1620-40-07** [1]	
1.600 x 2.000 x 400	62,99 x 78,74 x 15,75	3	11	248	546,84		**0390-1620-40-17** [1]
2.000 x 1.800 x 400	78,74 x 70,87 x 15,75	3	11	185,5	409,03	**0390-2018-40-07** [1]	
2.000 x 1.800 x 400	78,74 x 70,87 x 15,75	3	11	274	604,17		**0390-2018-40-17** [1]
2.000 x 2.000 x 400	78,74 x 78,74 x 15,75	3	11	200	441	**0390-2020-40-07** [1]	
2.000 x 2.000 x 400	78,74 x 78,74 x 15,75	3	11	299	659,3		**0390-2020-40-17** [1]

[1] with two doors

Technical Information

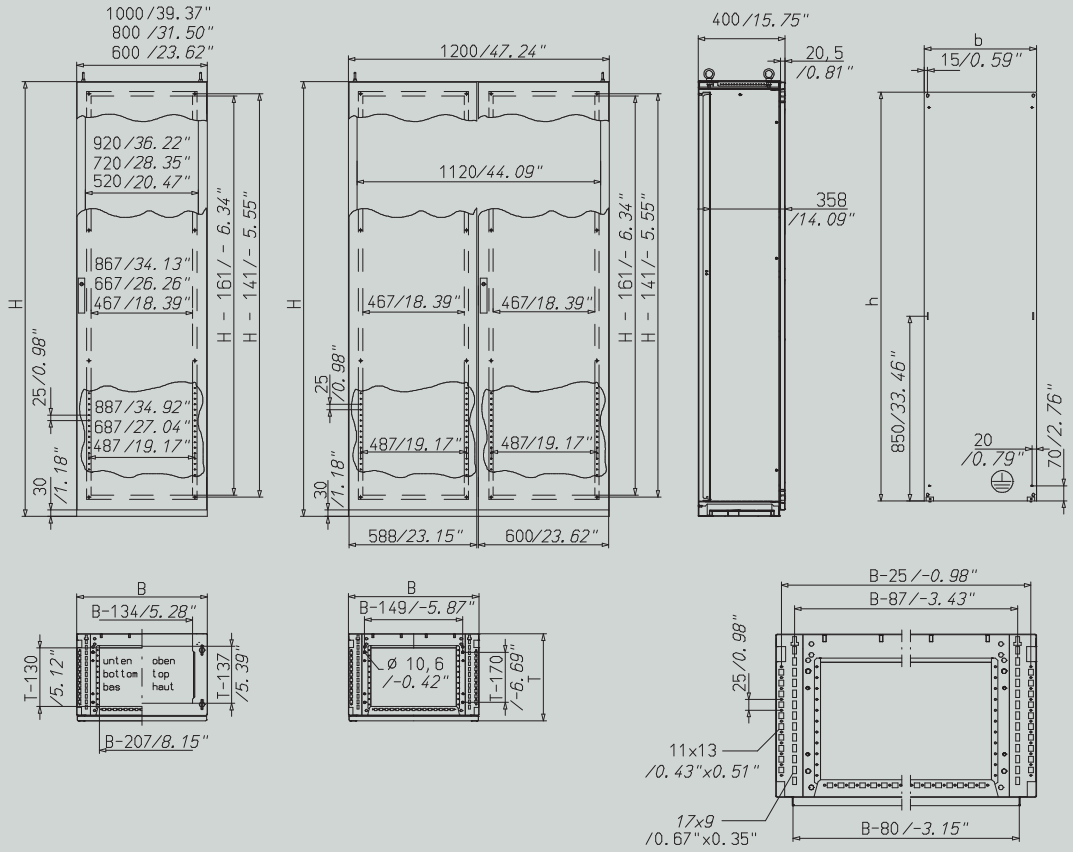

Sheet steel

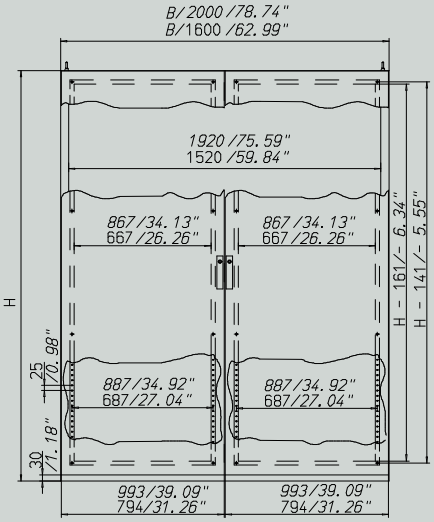

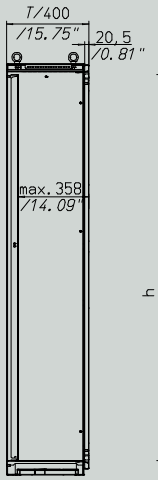

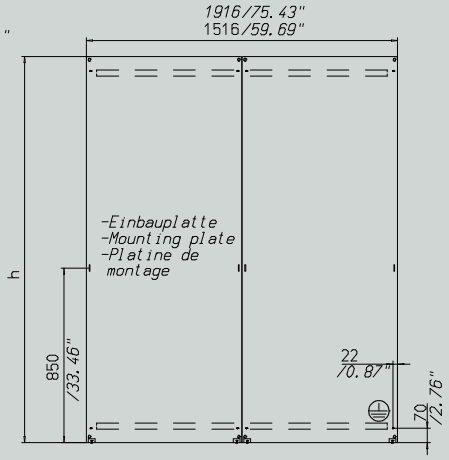

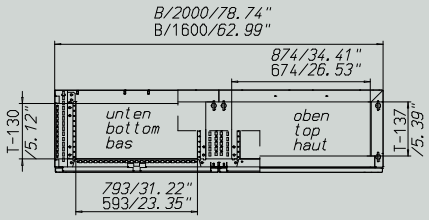

Accessories

Mounting kits for grounding straps Details ➜ **page 166**

	Description	Order No.
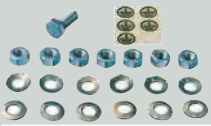	**For H370/H390 cabinets** **Hardware for mounting groundings straps in häwa cabinets and modular cabinets**	**3080-9036-03-90**

Bases height 3.94“ Details ➜ **page 96**

	Description	Dimension S		suitable for width		suitable for depth		Dimension T		Order No.
		mm	inch	mm	inch	mm	inch	mm	inch	
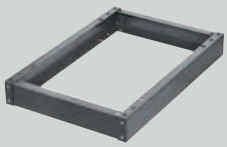	**For free-standing single and ganged-together modular cabinets** **Rugged U-profiles** **High lifting capacity**	330	12.99	600	23.62	400	15.75	375	14.76	**0396-6001-41-17**
		330	12.99	800	31.5	400	15.75	375	14.76	**0396-8001-41-17**
		330	12.99	1,000	39.37	400	15.75	375	14.76	**0396-1001-41-17**
		330	12.99	1,200	47.24	400	15.75	375	14.76	**0396-1201-41-17**
		330	12.99	1,600	62.99	400	15.75	375	14.76	**0396-1601-41-17**
		330	12.99	2,000	78.74	400	15.75	375	14.76	**0396-2001-41-17**

Base height 7.87“ for H390 Cabinets Details ➜ **page 100**

	Description	Dimensions		suitable for width		suitable for depth		Order No.
		mm	inch	mm	inch	mm	inch	
	For free-standing single and ganged-together modular cabinets **Rugged U-profiles** **High lifting capacity**	375	14.76	600	23.62	400	15.75	**0396.6002.41.17**
		375	14.76	800	31.5	400	15.75	**0396.8002.41.17**
		375	14.76	1,000	39.37	400	15.75	**0396.1002.41.17**
		375	14.76	1,200	47.24	400	15.75	**0396.1202.41.17**
		375	14.76	1,600	62.99	400	15.75	**0396.1602.41.17**
		375	14.76	2,000	78.74	400	15.75	**0396.2002.41.17**

Sheet steel

Bases height 3.94“ Details ➜ **page 95**

Description	Dimension S		suitable for width		suitable for depth		Dimension T		Order No.
	mm	inch	mm	inch	mm	inch	mm	inch	
For free-standing single and ganged-together modular cabinets Rugged U-profiles High lifting capacity	305	12.01	600	23.62	400	15.75	350	13.78	**0396-6001-40-17**
	305	12.01	800	31.5	400	15.75	350	13.78	**0396-8001-40-17**
	305	12.01	1,000	39.37	400	15.75	350	13.78	**0396-1001-40-17**
	305	12.01	1,200	47.24	400	15.75	350	13.78	**0396-1201-40-17**

Bases height 7.87“ Details ➜ **page 98**

Description	suitable for width		suitable for depth		Dimension T		Order No.
	mm	inch	mm	inch	mm	inch	
For free-standing single and ganged-together modular cabinets High lifting capacity	600	23.62	400	15.75	350	13.78	**0396.6002.40.17**
	800	31.5	400	15.75	350	13.78	**0396.8002.40.17**
	1,000	39.37	400	15.75	350	13.78	**0396.1002.40.17**
	1,200	47.24	400	15.75	350	13.78	**0396.1202.40.17**

Center attachment for H370/H390 Details ➜ **page 141**

Description	length		Order No.
	mm	inch	
For direct mounting to the side panel (without rail)	353	13.9	**0391-0003-40-00**

Hex-nut Verbus Tensilock Details ➜ **page 183**

Description	Thread	Art. Nr.
Self-locking nuts for use without washer	M 8	**3003-9500-08-00**

Vertical assembly rail Details ➜ **page 132**

Description	suitable for height		Order No.
	mm	inch	
Increases versatility of H370/H390 cabinets includes mounting hardware includes grounding bolt M8 forms the vertical mounting platform for all accessories in the H370 and H390 cabinets	1,600	62.99	**0391-9016-00-03**
	1,800	70.87	**0391-9018-00-03**
	2,000	78.74	**0391-9020-00-03**

Horizontal assembly rail Details ➜ **page 133**

Description	suitable for width		Order No.
	mm	inch	
Increases versatility of H370/H390 cabinets includes mounting hardware includes grounding bolt M8 forms the vertical mounting platform for all accessories in the H370 and H390 cabinets	600	23.62	**0391-9000-06-03**
	800	31.5	**0391-9000-08-03**
	1,000	39.37	**0391-9000-10-03**
	1,200	47.24	**0391-9000-12-03**

Free-Standing cabinets H390, D-19.69“

Features
- Free-standing
- User-friendly characteristics
- Customizable through a variety of option

Product Description
Free-standing cabinets with single or double door design. Available with or without mounting plate. Mounting rails for utilization of häwa accessories available as option.
Grounding per DIN EN 60439-1, grounding studs M8x20 on all moving and removable parts, as well as top and bottom panels.
- Grounding per DIN EN 60439-1, grounding studs M8x20 on all moving and removable parts, as well as top and bottom panels.
- Flanged edges form rain gutter and prevent dust and water from entering the cabinet
- Doors with foamed gaskets; can be mounted at right or left side – standard is right side.
- 120° hidden hinges, which can be easily exchanged with 180° hinges
- Locking with 3 mm double mandrel bolt
- With bolted reinforcement and attachment frame of solid square tubes perforated with 4.5 mm holes every 25 mm
- Top plate can be removed; 4 transport lugs M12 per DIN 580:2003-08
- Bottom with three-part , adjustable base plate and mounting holes 10.6 mm
- Mounting plates adjustable to depth every 25 mm. Quick and easy mounting via häwa locking brackets
- Excellent surface finish protection with improved pretreatment of the sheet metals by iron phosphatization and chrome-free repassivation as well as pollution free powder coating.

Technical Data
- Material: Sheet steel
- Surface finish: Powder coated RAL 7035
- Metal thickness door: 2 mm; 14 ga
- Metal thickness frame: 1.5 mm; 16 ga
- Metal thickness rear wall: 1.5 mm; 16 ga
- Approvals: cULus
- Protection type: IP55

Further technical information ➜ page 16

Scope of Delivery
- Cabinet complete with lifting eyes, top and bottom cable entry plates and one key.

Note
Hinged door on back and other modifications available. Please check with your häwa representative for updated price and delivery time.
Attention: Center attachment 0391-0003-..-00 can not be combined with vertical mounting rails 0391-90..-00-03. Cabinet space is utilized by means of horizontal and vertical mounting rails. For width 1600/2000 two sets of horizontal mounting rails are required.

Accessories
- Mounting kits for grounding straps ➜ page 14
- Bases height 3.94“ for H390 and H395 ➜ page 14
- Base height 7.87“ only for H390 Cabinets ➜ page 14
- Bases height 7.87“ ➜ page 14
- Horizontal assembly rail ➜ page 15
- Center attachment for H370/H390 ➜ page 15
- Vertical mounting rail ➜ page 15

Dimensions (WxHxD)		Metal thickness Mounting plate		Weight		Order No.	
						without mounting plate	with mounting plate
mm	inch	mm	ga	kg	lbs		
600 x 1.800 x 500	23,62 x 70,87 x 19,69	2,5	12	80	176,4	**0390-6018-50-07**	
600 x 1.800 x 500	23,62 x 70,87 x 19,69	2,5	12	99	218,3		**0390-6018-50-17**
600 x 2.000 x 500	23,62 x 78,74 x 19,69	2,5	12	86,5	190,73	**0390-6020-50-07**	
600 x 2.000 x 500	23,62 x 78,74 x 19,69	2,5	12	108	238,14		**0390-6020-50-17**
800 x 1.800 x 500	31,5 x 70,87 x 19,69	2,5	12	94,5	208,37	**0390-8018-50-07**	
800 x 1.800 x 500	31,5 x 70,87 x 19,69	2,5	12	121	266,8		**0390-8018-50-17**
800 x 2.000 x 500	31,5 x 78,74 x 19,69	2,5	12	102,5	226,01	**0390-8020-50-07**	
800 x 2.000 x 500	31,5 x 78,74 x 19,69	2,5	12	132	291,06		**0390-8020-50-17**
1.000 x 1.800 x 500	39,37 x 70,87 x 19,69	3	11	103	227,12	**0390-1018-50-07**	
1.000 x 1.800 x 500	39,37 x 70,87 x 19,69	3	11	143	315,32		**0390-1018-50-17**
1.000 x 2.000 x 500	39,37 x 78,74 x 19,69	3	11	111,5	245,86	**0390-1020-50-07**	
1.000 x 2.000 x 500	39,37 x 78,74 x 19,69	3	11	156	343,98		**0390-1020-50-17**
1.200 x 1.800 x 500	47,24 x 70,87 x 19,69	3	11	116	255,78	**0390-1218-50-07** [2]	
1.200 x 1.800 x 500	47,24 x 70,87 x 19,69	3	11	164	361,62		**0390-1218-50-17** [2]
1.200 x 2.000 x 500	47,24 x 78,74 x 19,69	3	11	125,5	276,73	**0390-1220-50-07** [2]	
1.200 x 2.000 x 500	47,24 x 78,74 x 19,69	3	11	179	394,7		**0390-1220-50-17** [2]

[2] with two doors

häwa

Technical Information

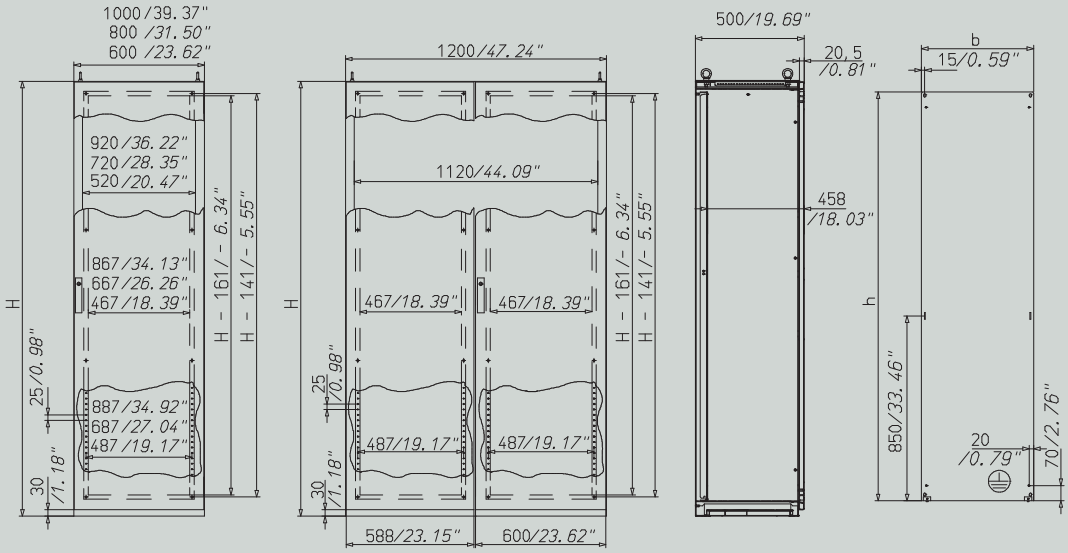

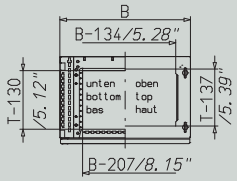

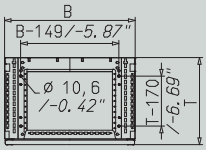

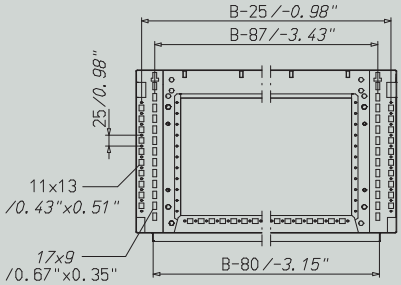

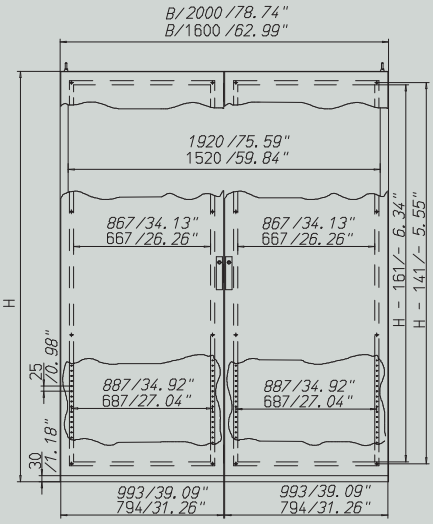

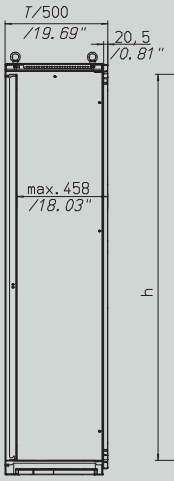

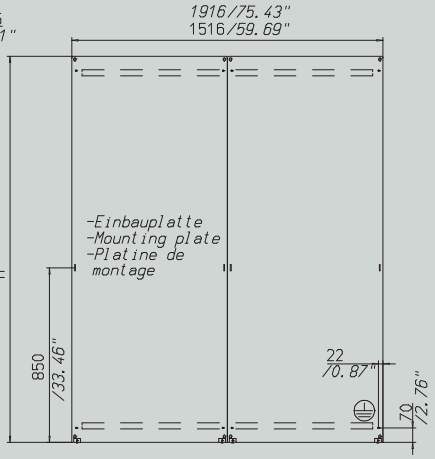

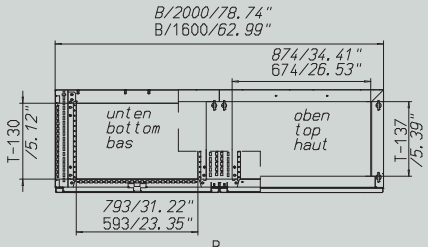

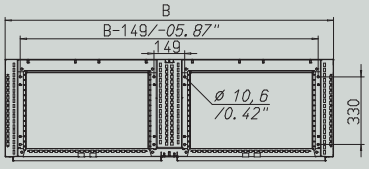

Accessories

Mounting kits for grounding straps Details ➜ **page 166**

Description	Order No.
For H370/H390 cabinets **Hardware for mounting groundings straps in häwa cabinets and modular cabinets**	**3080-9036-03-90**

Bases height 3.94“ Details ➜ **page 96**

Description	Dimension S		suitable for width		suitable for depth		Dimension T		Order No.
	mm	inch	mm	inch	mm	inch	mm	inch	
For free-standing single and ganged-together modular cabinets **Rugged U-profiles** **High lifting capacity**	430	16.93	600	23.62	500	19.69	475	18.7	**0396-6001-51-17**
	430	16.93	800	31.5	500	19.69	475	18.7	**0396-8001-51-17**
	430	16.93	1,000	39.37	500	19.69	475	18.7	**0396-1001-51-17**
	430	16.93	1,200	47.24	500	19.69	475	18.7	**0396-1201-51-17**

Base height 7.87“ for H390 Cabinets Details ➜ **page 100**

Description	Dimensions		suitable for width		suitable for depth		Order No.
	mm	inch	mm	inch	mm	inch	
For free-standing single and ganged-together modular cabinets **Rugged U-profiles** **High lifting capacity**	475	18.7	600	23.62	500	19.69	**0396.6002.51.17**
	475	18.7	800	31.5	500	19.69	**0396.8002.51.17**
	475	18.7	1,000	39.37	500	19.69	**0396.1002.51.17**
	475	18.7	1,200	47.24	500	19.69	**0396.1202.51.17**

Bases height 3.94“ Details ➜ **page 95**

Description	Dimension S		suitable for width		suitable for depth		Dimension T		Order No.
	mm	inch	mm	inch	mm	inch	mm	inch	
For free-standing single and ganged-together modular cabinets **Rugged U-profiles** **High lifting capacity**	405	15.94	600	23.62	500	19.69	450	17.72	**0396-6001-50-17**
	405	15.94	800	31.5	500	19.69	450	17.72	**0396-8001-50-17**
	405	15.94	1,000	39.37	500	19.69	450	17.72	**0396-1001-50-17**
	405	15.94	1,200	47.24	500	19.69	450	17.72	**0396-1201-50-17**

Bases height 7.87“ Details ➜ **page 98**

Description	suitable for width		suitable for depth		Dimension T		Order No.
	mm	inch	mm	inch	mm	inch	
Quick and easy installation **For free-standing single and ganged-together modular cabinets** **High lifting capacity**	600	23.62	500	19.69	450	17.72	**0396.6002.50.17**
	800	31.5	500	19.69	450	17.72	**0396.8002.50.17**
	1,000	39.37	500	19.69	450	17.72	**0396.1002.50.17**
	1,200	47.24	600	23.62	550	21.65	**0396.1202.60.17**

häwa

Center attachment for H370/H390 Details ➜ **page 141**

Description	length mm	length inch	Order No.
For direct mounting to the side panel (without rail)	453	17.83	**0391-0003-50-00**

Hex-nut Verbus Tensilock Details ➜ **page 183**

Description	Thread	Art. Nr.
Self-locking nuts for use without washer	M 8	**3003-9500-08-00**

Vertical assembly rail Details ➜ **page 132**

Description	suitable for height mm	suitable for height inch	Order No.
Increases versatility of H370/H390 cabinets includes mounting hardware includes grounding bolt M8 forms the vertical mounting platform for all accessories in the H370 and H390 cabinets	1,800	70.87	**0391-9018-00-03**
	2,000	78.74	**0391-9020-00-03**

Horizontal assembly rail Details ➜ **page 133**

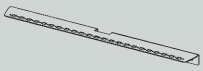

Description	suitable for width mm	suitable for width inch	Order No.
Increases versatility of H370/H390 cabinets includes mounting hardware includes grounding bolt M8 forms the vertical mounting platform for all accessories in the H370 and H390 cabinets	600	23.62	**0391-9000-06-03**
	800	31.5	**0391-9000-08-03**
	1,000	39.37	**0391-9000-10-03**
	1,200	47.24	**0391-9000-12-03**

Free-Standing cabinets H390, D-23.62“

Features
- Free-standing
- User-friendly characteristics
- Customizable through a variety of options

Product Description
Free-standing cabinets with single or double door design. Available with or without mounting plate. Mounting rails for utilization of häwa accessories available as option.
- Grounding per DIN EN 60439-1, grounding studs M8x20 on all moving and removable parts, as well as top and bottom panels.
- Flanged edges form rain gutter and prevent dust and water from entering the cabinet
- Doors with foamed gaskets; can be mounted at right or left side – standard is right side.
- 120° hidden hinges, which can be easily exchanged with 180° hinges
- Locking with 3 mm double mandrel bolt
- With bolted reinforcement and attachment frame of solid square tubes perforated with 4.5 mm holes every 25 mm
- Top plate can be removed; 4 transport lugs M12 per DIN 580:2003-08
- Bottom with three-part , adjustable base plate and mounting holes 10.6 mm
- Mounting plates adjustable to depth every 25 mm. Quick and easy mounting via häwa locking brackets
- Excellent surface finish protection with improved pretreatment of the sheet metals by iron phosphatization and chrome-free repassivation as well as pollution free powder coating

Technical Data
- Depth=23.62“
- Material: Sheet steel
- Surface finish: Powder coated RAL 7035
- Metal thickness door: 2 mm; 14 ga
- Metal thickness frame: 1.5 mm; 16 ga
- Metal thickness rear wall: 1.5 mm; 16 ga
- Approvals: cULus
- Protection type: IP55

Further technical information ➜ page 17

Scope of Delivery
- Cabinet complete with lifting eyes, top and bottom cable entry plates and one key.

Note
Hinged door on back and other modifications available. Please check with your häwa representative for updated price and delivery time.
Attention: Center attachment 0391-0003-..-00 can not be combined with vertical mounting rails 0391-90..-00-03. Cabinet space is utilized by means of horizontal and vertical mounting rails. For width 1600/2000 two sets of horizontal mounting rails are required.

Accessories
- Mounting kits for grounding straps ➜ page 18
- Bases height 3.94“ for H390 and H395 ➜ page 18
- Bases height 7.87“ ➜ page 18
- Base height 7.87“ only for H390 Cabinets ➜ page 18
- Horizontal assembly rail ➜ page 19
- Vertical mounting rail ➜ page 19
- Center attachment for H370/H390 ➜ page 19

Dimensions (WxHxD)		Metal thickness Mounting plate		Weight		Order No.	
						without mounting plate	**with mounting plate**
mm	inch	mm	ga	kg	lbs		
600 x 1.800 x 600	23,62 x 70,87 x 23,62	2,5	12	87	191,84	**0390-6018-60-07**	
600 x 1.800 x 600	23,62 x 70,87 x 23,62	2,5	12	106	233,73		**0390-6018-60-17**
600 x 2.000 x 600	23,62 x 78,74 x 23,62	2,5	12	93,5	206,17	**0390-6020-60-07**	
600 x 2.000 x 600	23,62 x 78,74 x 23,62	2,5	12	115	253,58		**0390-6020-60-17**
800 x 1.800 x 600	31,5 x 70,87 x 23,62	2,5	12	101,5	223,81	**0390-8018-60-07**	
800 x 1.800 x 600	31,5 x 70,87 x 23,62	2,5	12	128	282,24		**0390-8018-60-17**
800 x 2.000 x 600	31,5 x 78,74 x 23,62	2,5	12	110,5	243,65	**0390-8020-60-07**	
800 x 2.000 x 600	31,5 x 78,74 x 23,62	2,5	12	140	308,7		**0390-8020-60-17**
1.000 x 1.800 x 600	39,37 x 70,87 x 23,62	3	11	110	242,55	**0390-1018-60-07**	
1.000 x 1.800 x 600	39,37 x 70,87 x 23,62	3	11	150	330,75		**0390-1018-60-17**
1.000 x 2.000 x 600	39,37 x 78,74 x 23,62	3	11	119,5	263,5	**0390-1020-60-07**	
1.000 x 2.000 x 600	39,37 x 78,74 x 23,62	3	11	164	361,62		**0390-1020-60-17**
1.200 x 1.800 x 600	47,24 x 70,87 x 23,62	3	11	124	273,42	**0390-1218-60-07** [2]	
1.200 x 1.800 x 600	47,24 x 70,87 x 23,62	3	11	172	379,26		**0390-1218-60-17** [2]
1.200 x 2.000 x 600	47,24 x 78,74 x 23,62	3	11	134,5	296,57	**0390-1220-60-07** [2]	
1.200 x 2.000 x 600	47,24 x 78,74 x 23,62	3	11	188	414,54		**0390-1220-60-17** [2]

[2] with two doors

Accessories

Mounting kits for grounding straps Details ➜ **page 166**

Description	Order No.
For H370/H390 cabinets **Hardware for mounting groundings straps in häwa cabinets and modular cabinets**	**3080-9036-03-90**

Bases height 3.94“ Details ➜ **page 96**

Description	Dimension S		suitable for width		suitable for depth		Dimension T		Order No.
	mm	inch	mm	inch	mm	inch	mm	inch	
For free-standing single and ganged-together modular cabinets **Rugged U-profiles** **High lifting capacity**	530	20.87	600	23.62	600	23.62	575	22.64	**0396-6001-61-17**
	530	20.87	800	31.5	600	23.62	575	22.64	**0396-8001-61-17**
	530	20.87	1,000	39.37	600	23.62	575	22.64	**0396-1001-61-17**
	530	20.87	1,200	47.24	600	23.62	575	22.64	**0396-1201-61-17**

Base height 7.87“ for H390 Cabinets Details ➜ **page 100**

Description	Dimensions		suitable for width		suitable for depth		Order No.
	mm	inch	mm	inch	mm	inch	
For free-standing single and ganged-together modular cabinets **Rugged U-profiles** **High lifting capacity**	575	22.64	600	23.62	600	23.62	**0396.6002.61.17**
	575	22.64	800	31.5	600	23.62	**0396.8002.61.17**
	575	22.64	1,000	39.37	600	23.62	**0396.1002.61.17**
	575	22.64	1,200	47.24	600	23.62	**0396.1202.61.17**

Bases height 3.94“ Details ➜ **page 95**

Description	Dimension S		suitable for width		suitable for depth		Dimension T		Order No.	
	mm	inch	mm	inch	mm	inch	mm	inch		**with ventilation slots**
For free-standing single and ganged-together modular cabinets **Rugged U-profiles** **High lifting capacity**	505	19.88	600	23.62	600	23.62	550	21.65	**0396-6001-60-17**	**0396-6001-60-37**
	505	19.88	800	31.5	600	23.62	550	21.65	**0396-8001-60-17**	**0396-8001-60-37**
	505	19.88	1,000	39.37	600	23.62	550	21.65	**0396-1001-60-17**	
	505	19.88	1,200	47.24	600	23.62	550	21.65	**0396-1201-60-17**	

Bases height 7.87“ Details ➜ **page 98**

Description	suitable for width		suitable for depth		Dimension T		Order No.	
	mm	inch	mm	inch	mm	inch		**with ventilation slots**
Quick and easy installation **For free-standing single and ganged-together modular cabinets** **High lifting capacity**	600	23.62	600	23.62	550	21.65	**0396.6002.60.17**	**0396.6002.60.37**
	800	31.5	600	23.62	550	21.65	**0396.8002.60.17**	**0396.8002.60.37**
	1,000	39.37	600	23.62	550	21.65	**0396.1002.60.17**	
	1,200	47.24	600	23.62	550	21.65	**0396.1202.60.17**	

häwa

Center attachment for H370/H390 Details ➜ **page 141**

Description	length mm	length inch	Order No.
For direct mounting to the side panel (without rail)	553	21.77	**0391-0003-60-00**

Hex-nut Verbus Tensilock Details ➜ **page 183**

Description	Thread	Order No.
Self-locking nuts for use without washer	M 8	**3003-9500-08-00**

Vertical assembly rail Details ➜ **page 132**

Description	suitable for height mm	suitable for height inch	Order No.
Increases versatility of H370/H390 cabinets includes mounting hardware includes grounding bolt M8 forms the vertical mounting platform for all accessories in the H370 and H390 cabinets	1,800	70.87	**0391-9018-00-03**
	2,000	78.74	**0391-9020-00-03**

Horizontal assembly rail Details ➜ **page 133**

Description	suitable for width mm	suitable for width inch	Order No.
Increases versatility of H370/H390 cabinets includes mounting hardware includes grounding bolt M8 forms the vertical mounting platform for all accessories in the H370 and H390 cabinets	600	23.62	**0391-9000-06-03**
	800	31.5	**0391-9000-08-03**
	1,000	39.37	**0391-9000-10-03**
	1,200	47.24	**0391-9000-12-03**

Modular cabinets H395, D-15.75“

Features
- Strong
- Easy to work with
- Modular
- Ingenious in detail

Product Description
Modular cabinets with single or double door design. Available with or without mounting plate.
- Grounding per DIN EN 60439-1, grounding studs M8x20 on all moving and removable parts, as well as top and bottom panels.
- Flanged edges form rain gutter and prevent dust and water from entering the cabinet
- Doors with foamed gaskets; can be mounted at right or left side – standard is right side.
- 120° hidden hinges, which can be easily exchange with 180° hinges
- Locking with 3 mm double mandrel bolt
- With bolted reinforcement and attachment frame of solid square tubes perforated with 4.5 mm holes every 25 mm
- Top plate can be removed; 4 transport lugs M12 per DIN 580:2003-08
- Bottom with three-part , adjustable base plate and mounting holes 10.6 mm
- Mounting plates adjustable to depth every 25 mm. Quick and easy mounting via häwa locking brackets
- Excellent surface finish protection with improved pretreatment of the sheet metals by iron phosphatization and chrome-free repassivation as well as pollution free powder coating

Technical Data
- Depth = 15.75“
- Material: Sheet steel
- Surface finish: Powder coated RAL 7035
- Metal thickness door: 2 mm; 14 ga
- Metal thickness frame: 2 mm; 14 ga
- Metal thickness rear wall: 1.5 mm; 16 ga
- Approvals: cULus
- Protection type: IP55

Scope of Delivery
- Cabinet complete with hinged front door, bolted rear panel, lifting eyes, top and bottom cable entry plates and one key

Note
Rear hinged door, or other modifications are non stock items, price upon request

Accessories
- Connecting bolts ➜ page 22
- Mounting kits for grounding straps ➜ page 22
- Joining rubber gasket ➜ page 22
- Enhancement kits IP 56 for H395/H375 ➜ page 22
- Joining brackets ➜ page 22
- Connector ➜ page 22
- Bases height 7.87“ ➜ page 23
- Base Cross rail ➜ page 23
- Bases height 3.94“ for H390 and H395 ➜ page 23
- Side panel for H395 ➜ page 22

Dimensions (WxHxD)		Metal thickness Mounting plate		Weight		Art. Nr.	
						without mounting plate	**with mounting plate**
mm	inch	mm	ga	kg	lbs		
600 x 1.600 x 400	23,62 x 62,99 x 15,75	2,5	12	63,5	140,02	**0395-6016-40-07**	
600 x 1.600 x 400	23,62 x 62,99 x 15,75	2,5	12	80	176,4		**0395-6016-40-17**
600 x 1.800 x 400	23,62 x 70,87 x 15,75	2,5	12	68	149,94	**0395-6018-40-07**	
600 x 1.800 x 400	23,62 x 70,87 x 15,75	2,5	12	87	191,84		**0395-6018-40-17**
600 x 2.000 x 400	23,62 x 78,74 x 15,75	2,5	12	73,5	162,07	**0395-6020-40-07**	
600 x 2.000 x 400	23,62 x 78,74 x 15,75	2,5	12	95	209,48		**0395-6020-40-17**
800 x 1.600 x 400	31,5 x 62,99 x 15,75	2,5	12	75,5	166,48	**0395-8016-40-07**	
800 x 1.600 x 400	31,5 x 62,99 x 15,75	2,5	12	99	218,3		**0395-8016-40-17**
800 x 1.800 x 400	31,5 x 70,87 x 15,75	2,5	12	82,5	181,91	**0395-8018-40-07**	
800 x 1.800 x 400	31,5 x 70,87 x 15,75	2,5	12	109	240,34		**0395-8018-40-17**
800 x 2.000 x 400	31,5 x 78,74 x 15,75	2,5	12	88,5	195,14	**0395-8020-40-07**	
800 x 2.000 x 400	31,5 x 78,74 x 15,75	2,5	12	118	260,19		**0395-8020-40-17**
1.000 x 1.800 x 400	39,37 x 70,87 x 15,75	3	11	97	213,88	**0395-1018-40-07**	
1.000 x 1.800 x 400	39,37 x 70,87 x 15,75	3	11	137	302,08		**0395-1018-40-17**
1.000 x 2.000 x 400	39,37 x 78,74 x 15,75	3	11	104,5	230,42	**0395-1020-40-07**	
1.000 x 2.000 x 400	39,37 x 78,74 x 15,75	3	11	149	328,54		**0395-1020-40-17**

häwa

Dimensions (WxHxD)		Metal thickness Mounting plate		Weight		Art. Nr.	
						without mounting plate	with mounting plate
mm	inch	mm	ga	kg	lbs		
1.200 x 1.600 x 400	47,24 x 62,99 x 15,75	3	11	102,5	226,01	**0395-1216-40-07** [2]	
1.200 x 1.600 x 400	47,24 x 62,99 x 15,75	3	11	145	319,72		**0395-1216-40-17** [2]
1.200 x 1.800 x 400	47,24 x 70,87 x 15,75	3	11	115	253,58	**0395-1218-40-07** [2]	
1.200 x 1.800 x 400	47,24 x 70,87 x 15,75	3	11	163	359,42		**0395-1218-40-17** [2]
1.200 x 2.000 x 400	47,24 x 78,74 x 15,75	3	11	123,5	272,32	**0395-1220-40-07** [2]	
1.200 x 2.000 x 400	47,24 x 78,74 x 15,75	3	11	177	390,28		**0395-1220-40-17** [2]

[2] with two doors

Technical Information

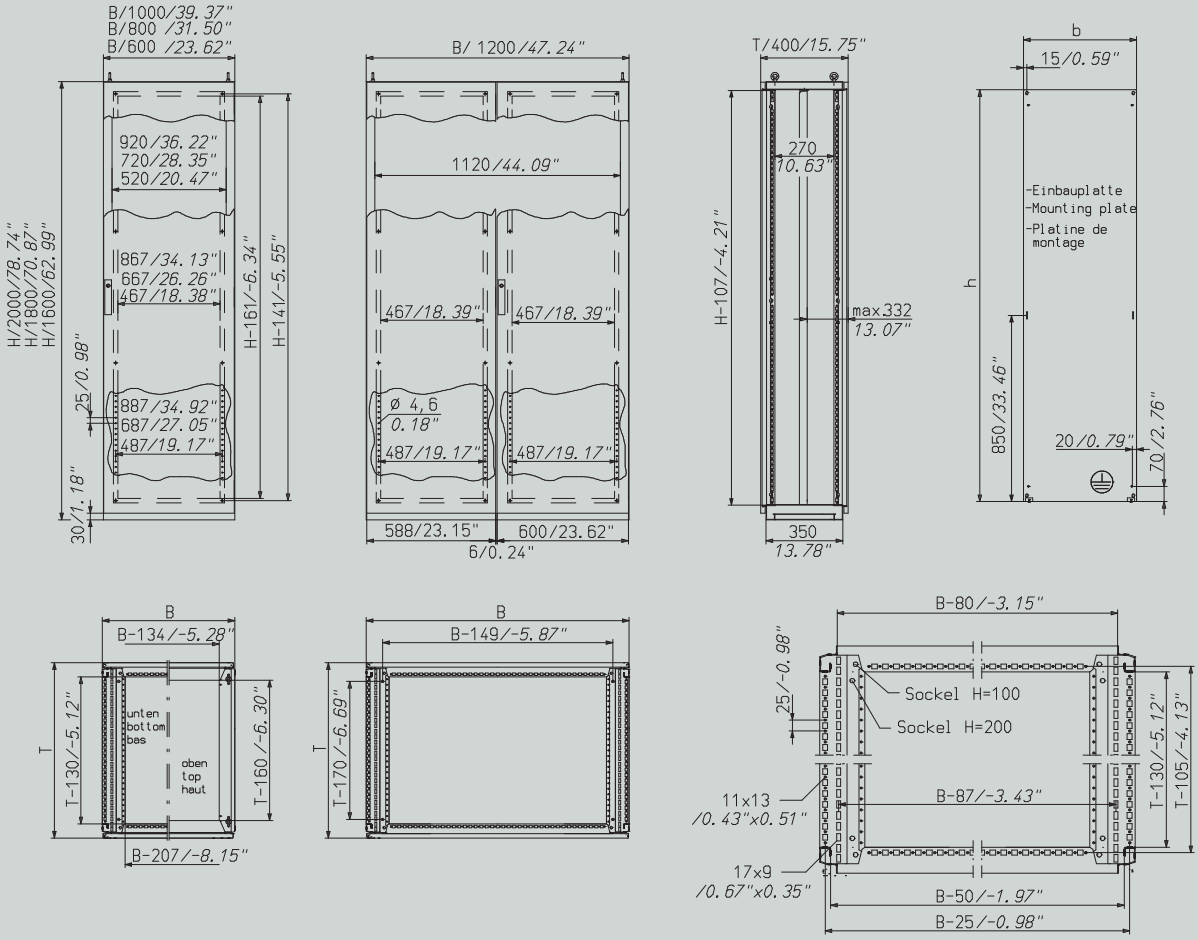

Accessories

Connector set Standard Details ➜ **page 189**

Description	Order No.
For modular installation of cabinets	**0396-7002-00-43**

Joining rubber gasket Details ➜ **page 174**

Description	Order No.
One-sided self-adhesive with oil-resistant adhesive	**3080-0102-18-00**

Connector set Details ➜ **page 189**

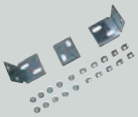

Description	Order No.
For modular installation of cabinets	**0396-7032-01-43**

Joining brackets Details ➜ **page 188**

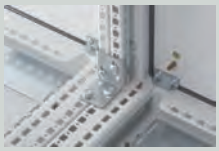

Description	Order No.
Brackets for joining adjacent modular cabinets.	**0396-0010-00-00**

Joining flange adaptor Details ➜ **page 188**

Description	Order No.
For modular cabinet assembly.	**0396-0012-00-00**

Mounting kits for grounding straps Details ➜ **page 166**

Description	Order No.
For H375/H395 cabinets **Hardware for mounting grounding straps in häwa modular cabinets**	**3080-9036-03-95**

Side panel H395 Details ➜ **page 94**

Description	suitable for height		suitable for depth		Dimension HS		Dimension TS		Order No.
	mm	inch	mm	inch	mm	inch	mm	inch	
For installation of outward side panels of modular cabinets H395	1,600	62.99	400	15.75	1,596	62.83	350	13.78	**0396-7016-40-67**
	1,800	70.87	400	15.75	1,796	70.71	350	13.78	**0396-7018-40-67**
	2,000	78.74	400	15.75	1,996	78.58	350	13.78	**0396-7020-40-67**

Enhancement kits IP 56 for H395/H375 Details ➜ **page 174**

Description	Order No.
Gasket 10x2 mm, self-adhesive, and sealing washers, 11 mm diameter, for additional sealing of side panels and fittings **To increase IP rating from IP55 to IP56** **for all H395 and H375 modular cabinets**	**0396-7056-01-00**

häwa

Technical Information

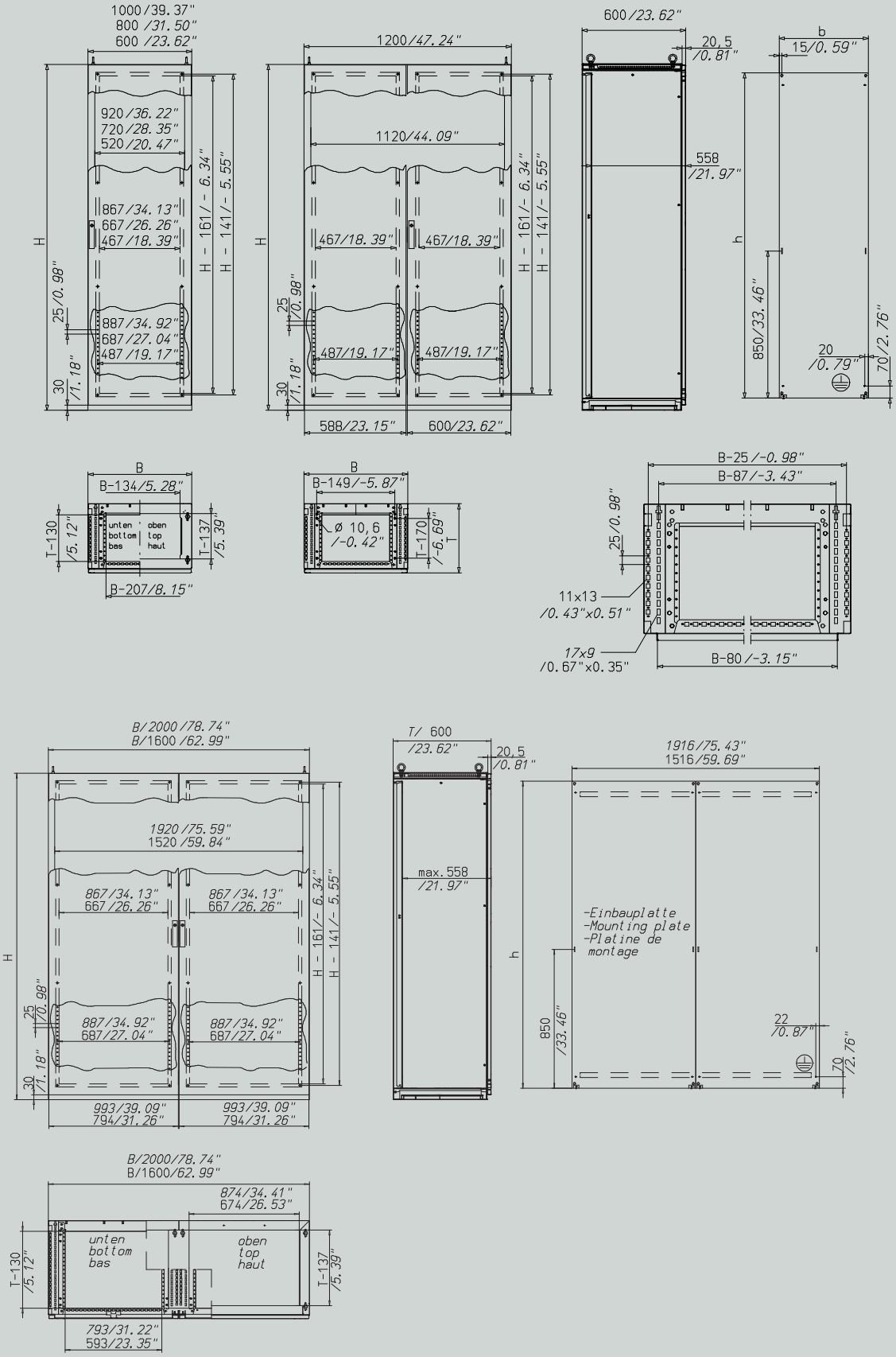

Sheet steel

Bases height 3.94“ Details ➜ **page 95**

Description	Dimension S		suitable for width		suitable for depth		Dimension T		Order No.
	mm	inch	mm	inch	mm	inch	mm	inch	
For free-standing single and ganged-together modular cabinets Rugged U-profiles High lifting capacity	305	12.01	600	23.62	400	15.75	350	13.78	**0396-6001-40-17**
	305	12.01	800	31.5	400	15.75	350	13.78	**0396-8001-40-17**
	305	12.01	1,000	39.37	400	15.75	350	13.78	**0396-1001-40-17**
	305	12.01	1,200	47.24	400	15.75	350	13.78	**0396-1201-40-17**

Bases height 7.87“ Details ➜ **page 98**

Description	suitable for width		suitable for depth		Dimension T		Order No.
	mm	inch	mm	inch	mm	inch	
Quick and easy installation For free-standing single and ganged-together modular cabinets High lifting capacity	600	23.62	400	15.75	350	13.78	**0396.6002.40.17**
	800	31.5	400	15.75	350	13.78	**0396.8002.40.17**
	1,000	39.37	400	15.75	350	13.78	**0396.1002.40.17**
	1,200	47.24	400	15.75	350	13.78	**0396.1202.40.17**

Base Cross rail Details ➜ **page 102**

Description	suitable for depth		Order No.
	mm	inch	
Base cross rail for installation in upper or lower section of 200 mm high base. Additional strengthening of ganged together bases To build multiple levels within base	400	15.75	**0396-0000-40-07**

Hex attachment screw Details ➜ **page 182**

Order No.
0348-7500-06-12

Hex-nut Verbus Tensilock Details ➜ **page 183**

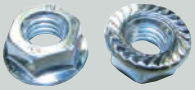

Description	Thread	Order No.
Self-locking nuts for use without washer	M 8	**3003-9500-08-00**

Modular cabinets H395, D-19.69“

Features
- Strong
- Easy to work with
- Modular
- Ingenious in detail

Product Description
Modular cabinets with single or double door design. Available with or without mounting plate.
- Grounding per DIN EN 60439-1, grounding studs M8x20 on all moving and removable parts, as well as top and bottom panels.
- Flanged edges form rain gutter and prevent dust and water from entering the cabinet
- Doors with foamed gaskets; can be mounted at right or left side – standard is right side.
- 120° hidden hinges, which can be easily exchange with 180° hinges
- Locking with 3 mm double mandrel bolt
- With bolted reinforcement and attachment frame of solid square tubes perforated with 4.5 mm holes every 25 mm
- Top plate can be removed; 4 transport lugs M12 per DIN 580:2003-08
- Bottom with three-part , adjustable base plate and mounting holes 10.6 mm
- Mounting plates adjustable to depth every 25 mm. Quick and easy mounting via häwa locking brackets
- Excellent surface finish protection with improved pretreatment of the sheet metals by iron phosphatization and chrome-free repassivation as well as pollution free powder coating

Technical Data
- Depth=19.69“
- Material: Sheet steel
- Surface finish: Powder coated RAL 7035
- Metal thickness door: 2 mm; 14 ga
- Metal thickness frame: 2 mm; 14 ga
- Metal thickness rear wall: 1.5 mm; 16 ga
- Approvals: cULus
- Protection type: IP55

Further technical information ➜ page 21

Scope of Delivery
- Cabinet complete with hinged front door, bolted rear panel, lifting eyes, top and bottom cable entry plates and one key

Note
Rear hinged door, or other modifications are non stock items, price upon request

Accessories
- Connecting bolts ➜ page 26
- Mounting kits for grounding straps ➜ page 26
- Joining rubber gasket ➜ page 26
- Enhancement kits IP 56 for H395/H375 ➜ page 26
- Joining brackets ➜ page 26
- Connector ➜ page 26
- Base Cross rail ➜ page 27
- Side panel for H395 ➜ page 26
- Bases height 3.94“ for H390 and H395 ➜ page 27
- Bases height 7.87“ ➜ page 27

Dimensions (WxHxD)		Metal thickness Mounting plate		Weight		Order No.	
mm	inch	mm	ga	kg	lbs	**without mounting plate**	**with mounting plate**
600 x 1.800 x 500	23,62 x 70,87 x 19,69	2,5	12	71	156,56	**0395-6018-50-07**	
600 x 1.800 x 500	23,62 x 70,87 x 19,69	2,5	12	90	198,45		**0395-6018-50-17**
600 x 2.000 x 500	23,62 x 78,74 x 19,69	2,5	12	76,5	168,68	**0395-6020-50-07**	
600 x 2.000 x 500	23,62 x 78,74 x 19,69	2,5	12	98	216,09		**0395-6020-50-17**
800 x 1.800 x 500	31,5 x 70,87 x 19,69	2,5	12	85,5	188,53	**0395-8018-50-07** **0395-8218-50-07** [2)]	
800 x 1.800 x 500	31,5 x 70,87 x 19,69	2,5	12	112	246,96		**0395-8018-50-17** **0395-8218-50-17** [2)]
800 x 2.000 x 500	31,5 x 78,74 x 19,69	2,5	12	92,5	203,96	**0395-8020-50-07** **0395-8220-50-07** [2)]	
800 x 2.000 x 500	31,5 x 78,74 x 19,69	2,5	12	122	269,01		**0395-8020-50-17** **0395-8220-50-17** [2)]
1.000 x 1.800 x 500	39,37 x 70,87 x 19,69	3	11	100	220,5	**0395-1018-50-07**	
1.000 x 1.800 x 500	39,37 x 70,87 x 19,69	3	11	140	308,7		**0395-1018-50-17**
1.000 x 2.000 x 500	39,37 x 78,74 x 19,69	3	11	107,5	237,04	**0395-1020-50-07**	
1.000 x 2.000 x 500	39,37 x 78,74 x 19,69	3	11	152	335,16		**0395-1020-50-17**

häwa

Dimensions (WxHxD)		Metal thickness Mounting plate		Weight		Order No.	
						without mounting plate	with mounting plate
mm	inch	mm	ga	kg	lbs		
1.200 x 1.800 x 500	47,24 x 70,87 x 19,69	3	11	119	262,4	**0395-1218-50-07** [2]	
1.200 x 1.800 x 500	47,24 x 70,87 x 19,69	3	11	167	368,24		**0395-1218-50-17** [2]
1.200 x 2.000 x 500	47,24 x 78,74 x 19,69	3	11	128,5	283,34	**0395-1220-50-07** [2]	
1.200 x 2.000 x 500	47,24 x 78,74 x 19,69	3	11	182	401,31		**0395-1220-50-17** [2]

[2] with two doors

Technical Information

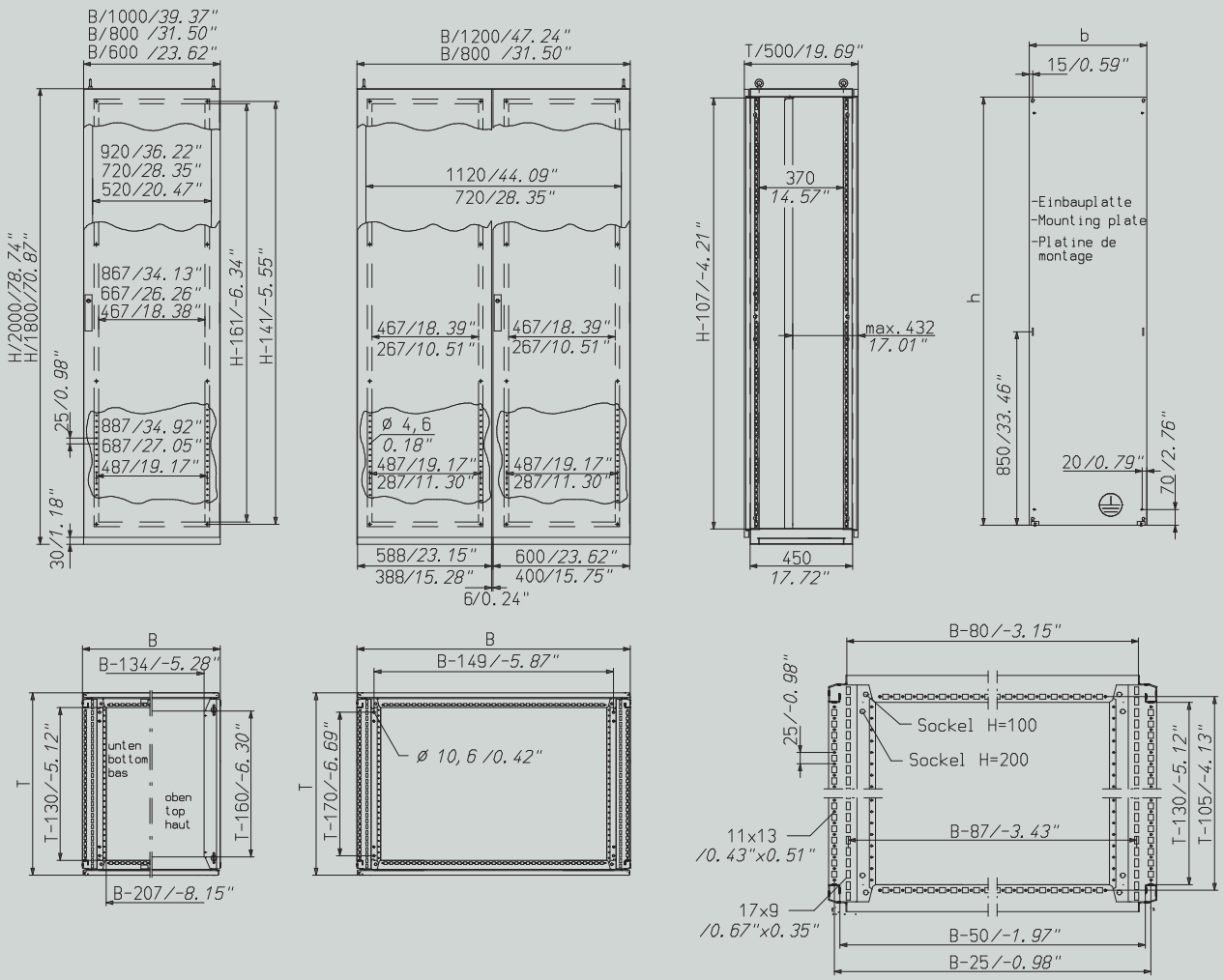

Accessories

Connector set Standard Details ➜ **page 189**

Description	Order No.
For modular installation of cabinets	0396-7002-00-43

Joining rubber gasket Details ➜ **page 174**

Description	Order No.
One-sided self-adhesive with oil-resistant adhesive	3080-0102-18-00

Connector set Details ➜ **page 189**

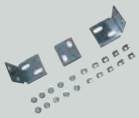

Description	Order No.
For modular installation of cabinets	0396-7032-01-43

Joining brackets Details ➜ **page 188**

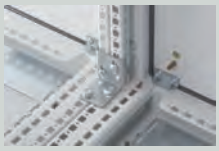

Description	Order No.
Brackets for joining adjacent modular cabinets.	0396-0010-00-00

Joining flange adaptor Details ➜ **page 188**

Description	Order No.
For modular cabinet assembly.	0396-0012-00-00

Mounting kits for grounding straps Details ➜ **page 166**

Description	Order No.
For H375/H395 cabinets Hardware for mounting grounding straps in häwa modular cabinets	3080-9036-03-95

Side panel H395 Details ➜ **page 94**

Description	suitable for height		suitable for depth		Dimension HS		Dimension TS		Order No.
	mm	inch	mm	inch	mm	inch	mm	inch	
For installation of outward side panels of modular cabinets H395	1,800	70.87	500	19.69	1,796	70.71	450	17.72	0396-7018-50-67
	2,000	78.74	500	19.69	1,996	78.58	450	17.72	0396-7020-50-67

Enhancement kits IP 56 for H395/H375 Details ➜ **page 174**

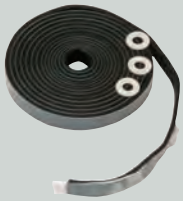

Description	Order No.
Gasket 10x2 mm, self-adhesive, and sealing washers, 11 mm diameter, for additional sealing of side panels and fittings To increase IP rating from IP55 to IP56 for all H395 and H375 modular cabinets	0396-7056-01-00

häwa

Bases height 3.94“ Details ➜ **page 95**

Description	Dimension S		suitable for width		suitable for depth		Dimension T		Order No.
	mm	inch	mm	inch	mm	inch	mm	inch	
For free-standing single and ganged-together modular cabinets Rugged U-profiles High lifting capacity	405	15.94	600	23.62	500	19.69	450	17.72	**0396-6001-50-17**
	405	15.94	800	31.5	500	19.69	450	17.72	**0396-8001-50-17**
	405	15.94	1,000	39.37	500	19.69	450	17.72	**0396-1001-50-17**
	405	15.94	1,200	47.24	500	19.69	450	17.72	**0396-1201-50-17**

Bases height 7.87“ Details ➜ **page 98**

Description	suitable for width		suitable for depth		Dimension T		Order No.
	mm	inch	mm	inch	mm	inch	
Quick and easy installation For free-standing single and ganged-together modular cabinets High lifting capacity	600	23.62	500	19.69	450	17.72	**0396.6002.50.17**
	800	31.5	500	19.69	450	17.72	**0396.8002.50.17**
	1,000	39.37	500	19.69	450	17.72	**0396.1002.50.17**
	1,200	47.24	500	19.69	450	17.72	**0396.1202.50.17**

Base Cross rail Details ➜ **page 102**

Description	suitable for depth		Order No.
	mm	inch	
Base cross rail for installation in upper or lower section of 200 mm high base. Additional strengthening of ganged together bases To build multiple levels within base	500	19.69	**0396-0000-50-07**

Hex attachment screw Details ➜ **page 182**

Order No.
0348-7500-06-12

Hex-nut Verbus Tensilock Details ➜ **page 183**

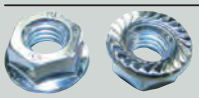

Description	Thread	Order No.
Self-locking nuts for use without washer	M 6	**3003-9500-06-00**

Modular cabinets H395, D-23.62“

Features
- Strong
- Easy to work with
- Modular
- Ingenious in detail

Product Description
Modular cabinets with single or double door design. Available with or without mounting plate.
- Grounding per DIN EN 60439-1, grounding studs M8x20 on all moving and removable parts, as well as top and bottom panels.
- Flanged edges form rain gutter and prevent dust and water from entering the cabinet
- Doors with foamed gaskets; can be mounted at right or left side – standard is right side.
- 120° hidden hinges, which can be easily exchange with 180° hinges
- Locking with 3 mm double mandrel bolt
- With bolted reinforcement and attachment frame of solid square tubes perforated with 4.5 mm holes every 25 mm
- Top plate can be removed; 4 transport lugs M12 per DIN 580:2003-08
- Bottom with three-part , adjustable base plate and mounting holes 10.6 mm
- Mounting plates adjustable to depth every 25 mm. Quick and easy mounting via häwa locking brackets
- Excellent surface finish protection with improved pretreatment of the sheet metals by iron phosphatization and chrome-free repassivation as well as pollution free powder coating

Technical Data
- Material: Sheet steel
- Surface finish: Powder coated RAL 7035
- Metal thickness door: 2 mm; 14 ga
- Metal thickness frame: 2 mm; 14 ga
- Metal thickness rear wall: 1.5 mm; 16 ga
- Approvals: cULus
- Protection type: IP55

Further technical information ➜ page 29

Scope of Delivery
- Cabinet complete with hinged front door, bolted rear panel, lifting eyes, top and bottom cable entry plates and one key

Note
Rear hinged door, or other modifications are non stock items, price upon request

Accessories
- Connecting bolts ➜ page 30
- Mounting kits for grounding straps ➜ page 30
- Joining rubber gasket ➜ page 30
- Enhancement kits IP 56 for H395/H375 ➜ page 30
- Joining brackets ➜ page 30
- Joining flange adaptor ➜ page 30
- Connector ➜ page 30
- Base Cross rail ➜ page 31
- Side panel for H395 ➜ page 30
- Bases height 3.94“ for H390 and H395 ➜ page 31
- Bases height 7.87“ ➜ page 31
- Side doors ➜ page 31

Dimensions (WxHxD)		Metal thickness Mounting plate		Weight		Order No.	
mm	inch	mm	ga	kg	lbs	without mounting plate	with mounting plate
600 x 1.600 x 600	23,62 x 62,99 x 23,62	2,5	12	68,5	151,04	**0395-6016-60-07**	
600 x 1.600 x 600	23,62 x 62,99 x 23,62	2,5	12	85	187,42		**0395-6016-60-17**
600 x 1.800 x 600	23,62 x 70,87 x 23,62	2,5	12	74	163,17	**0395-6018-60-07**	
600 x 1.800 x 600	23,62 x 70,87 x 23,62	2,5	12	93	205,06		**0395-6018-60-17**
600 x 2.000 x 600	23,62 x 78,74 x 23,62	2,5	12	78,5	173,09	**0395-6020-60-07**	
600 x 2.000 x 600	23,62 x 78,74 x 23,62	2,5	12	100	220,5		**0395-6020-60-17**
600 x 2.200 x 600	23,62 x 86,61 x 23,62	2,5	12	84,5	186,32	**0395-6022-60-07**	
600 x 2.200 x 600	23,62 x 86,61 x 23,62	2,5	12	108	238,14		**0395-6022-60-17**
800 x 1.600 x 600	31,5 x 62,99 x 23,62	2,5	12	82,5	181,91	**0395-8016-60-07**	
800 x 1.600 x 600	31,5 x 62,99 x 23,62	2,5	12	106	233,73		**0395-8016-60-17**
800 x 1.800 x 600	31,5 x 70,87 x 23,62	2,5	12	88,5	195,14	**0395-8018-60-07**	
800 x 1.800 x 600	31,5 x 70,87 x 23,62	2,5	12	115	253,58		**0395-8018-60-17**
800 x 2.000 x 600	31,5 x 78,74 x 23,62	2,5	12	95,5	210,58	**0395-8020-60-07**	
800 x 2.000 x 600	31,5 x 78,74 x 23,62	2,5	12	125	275,62		**0395-8020-60-17**
800 x 2.200 x 600	31,5 x 86,61 x 23,62	2,5	12	101,5	223,81	**0395-8022-60-07**	
800 x 2.200 x 600	31,5 x 86,61 x 23,62	2,5	12	134	295,47		**0395-8022-60-17**

häwa

Dimensions (WxHxD)		Metal thickness Mounting plate		Weight		Order No.	
						without mounting plate	with mounting plate
mm	inch	mm	ga	kg	lbs		
1.000 x 1.800 x 600	39,37 x 70,87 x 23,62	3	11	104	229,32	**0395-1018-60-07**	
1.000 x 1.800 x 600	39,37 x 70,87 x 23,62	3	11	144	317,52		**0395-1018-60-17**
1.000 x 2.000 x 600	39,37 x 78,74 x 23,62	3	11	111,5	245,86	**0395-1020-60-07**	
1.000 x 2.000 x 600	39,37 x 78,74 x 23,62	3	11	156	343,98		**0395-1020-60-17**
1.000 x 2.200 x 600	39,37 x 86,61 x 23,62	3	11	119	262,4	**0395-1022-60-07**	
1.000 x 2.200 x 600	39,37 x 86,61 x 23,62	3	11	168	370,44		**0395-1022-60-17**
1.200 x 1.800 x 600	47,24 x 70,87 x 23,62	3	11	123	271,22	**0395-1218-60-07** [2]	
1.200 x 1.800 x 600	47,24 x 70,87 x 23,62	3	11	171	377,06		**0395-1218-60-17** [2]
1.200 x 2.000 x 600	47,24 x 78,74 x 23,62	3	11	132,5	292,16	**0395-1220-60-07** [2]	
1.200 x 2.000 x 600	47,24 x 78,74 x 23,62	3	11	186	410,13		**0395-1220-60-17** [2]
1.200 x 2.200 x 600	47,24 x 86,61 x 23,62	3	11	141	310,9	**0395-1222-60-07** [2]	
1.200 x 2.200 x 600	47,24 x 86,61 x 23,62	3	11	200	441		**0395-1222-60-17** [2]

[2] with two doors

Technical Information

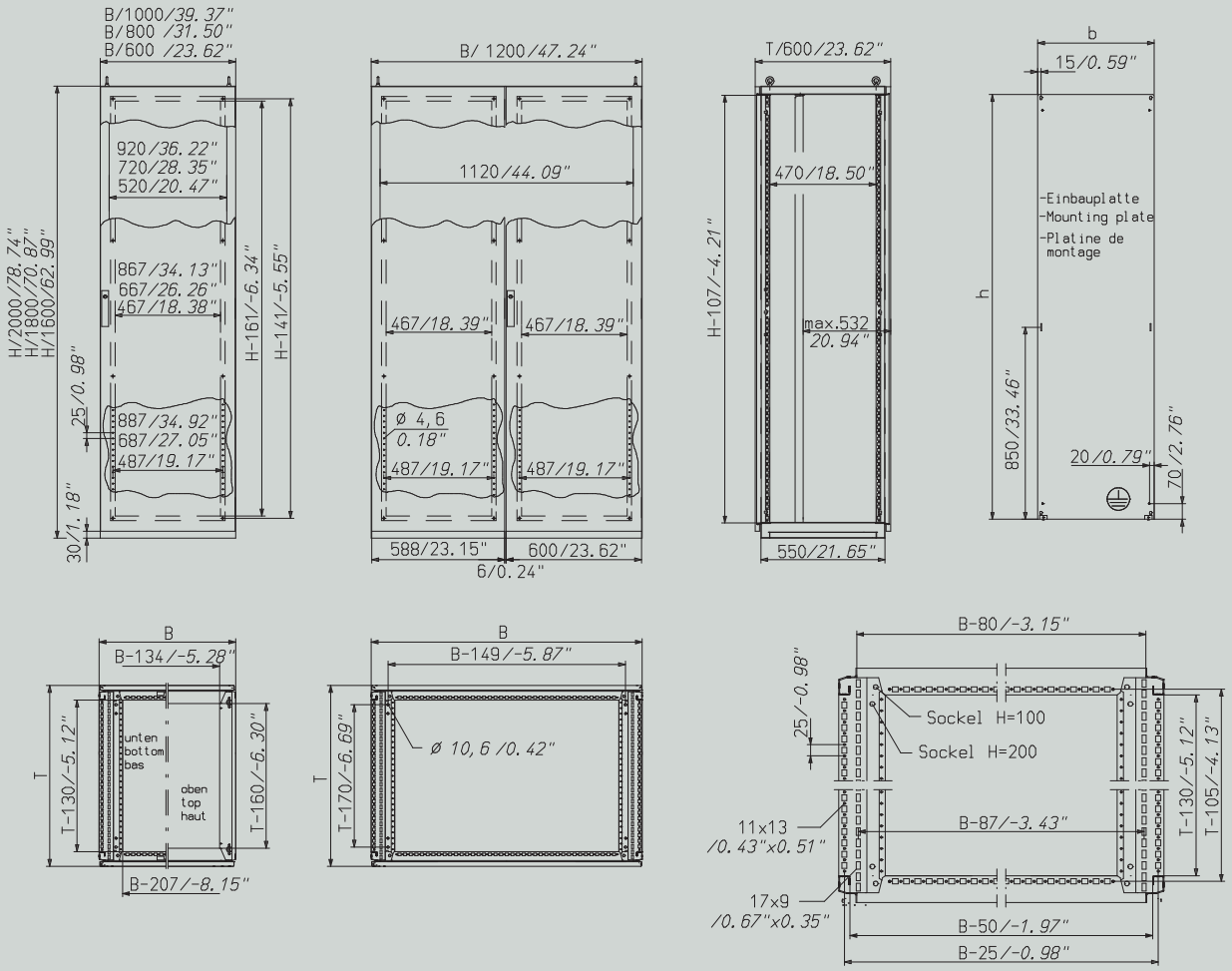

Accessories

Connector set Standard Details ➜ **page 189**

Description	Order No.
For modular installation of cabinets	0396-7002-00-43

Joining rubber gasket Details ➜ **page 174**

Description	Order No.
One-sided self-adhesive with oil-resistant adhesive	3080-0102-18-00

Connector set Details ➜ **page 189**

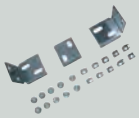

Description	Order No.
For modular installation of cabinets	0396-7032-01-43

Joining brackets Details ➜ **page 188**

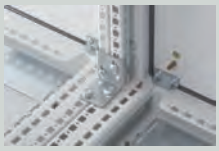

Description	Order No.
Brackets for joining adjacent modular cabinets.	0396-0010-00-00

Joining flange adaptor Details ➜ **page 188**

Description	Order No.
For modular cabinet assembly.	0396-0012-00-00

Mounting kits for grounding straps Details ➜ **page 166**

Description	Order No.
For H375/H395 cabinets Hardware for mounting grounding straps in häwa modular cabinets	3080-9036-03-95

Side panel H395 Details ➜ **page 94**

Description	suitable for height		suitable for depth		Dimension HS		Dimension TS		Order No.
	mm	inch	mm	inch	mm	inch	mm	inch	
For installation of outward side panels of modular cabinets H395	1,600	62.99	600	23.62	1,596	62.83	550	21.65	0396-7016-60-67
	1,800	70.87	600	23.62	1,796	70.71	550	21.65	0396-7018-60-67
	2,000	78.74	600	23.62	1,996	78.58	550	21.65	0396-7020-60-67
	2,200	86.61	600	23.62	2,196	86.46	550	21.65	0396-7022-60-67

Enhancement kits IP 56 for H395/H375 Details ➜ **page 174**

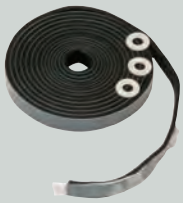

Description	Order No.
Gasket 10x2 mm, self-adhesive, and sealing washers, 11 mm diameter, for additional sealing of side panels and fittings To increase IP rating from IP55 to IP56 for all H395 and H375 modular cabinets	0396-7056-01-00

häwa

Side doors Details ➜ **page 107**

Description	Dimensions		suitable for height		suitable for depth		Order No.
	mm	inch	mm	inch	mm	inch	
Fit H395 cabinets **With bolted reinforcement and attachment frame of solid square tubes perforated with 4.5 mm holes every 25 mm** **Seamless, foamed-in-place gasket for IP55 / NEMA 12 protection** **2 grounding studs M8x20**	1,800 x 600	70.87 x 23.62	1,800	70.87	600	23.62	**0395-6018-07-97**
	2,000 x 600	78.74 x 23.62	2,000	78.74	600	23.62	**0395-6020-07-97**

Bases height 3.94“ Details ➜ **page 95**

Description	Dimension S		suitable for width		suitable for depth		Dimension T		Order No.	
	mm	inch	mm	inch	mm	inch	mm	inch		**with ventilation slots**
For free-standing single and ganged-together modular cabinets **Rugged U-profiles** **High lifting capacity**	505	19.88	600	23.62	600	23.62	550	21.65	**0396-6001-60-17**	**0396-6001-60-37**
	505	19.88	800	31.5	600	23.62	550	21.65	**0396-8001-60-17**	
	505	19.88	1,000	39.37	600	23.62	550	21.65	**0396-1001-60-17**	
	505	19.88	1,200	47.24	600	23.62	550	21.65	**0396-1201-60-17**	

Bases height 7.87“ Details ➜ **page 98**

Description	suitable for width		suitable for depth		Dimension T		Order No.	
	mm	inch	mm	inch	mm	inch		**with ventilation slots**
Quick and easy installation **For free-standing single and ganged-together modular cabinets** **High lifting capacity**	600	23.62	600	23.62	550	21.65	**0396.6002.60.17**	**0396.6002.60.37**
	800	31.5	600	23.62	550	21.65	**0396.8002.60.17**	
	1,000	39.37	600	23.62	550	21.65	**0396.1002.60.17**	
	1,200	47.24	600	23.62	550	21.65	**0396.1202.60.17**	

Base Cross rail Details ➜ **page 102**

	Description	suitable for depth		Order No.
		mm	inch	
	Base cross rail for installation in upper or lower section of 200 mm high base. **Additional strengthening of ganged together bases** **To build multiple levels within base**	600	23.62	**0396-0000-60-07**

Hex attachment screw Details ➜ **page 182**

	Order No.
	0348-7500-06-12

Hex-nut Verbus Tensilock Details ➜ **page 183**

	Description	Thread	Order No.
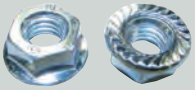	**Self-locking nuts for use without washer**	M 6	**3003-9500-06-00**

Modular cabinets H395, D-31.50“

Features
- Strong
- Easy to work with
- Modular
- Ingenious in detail

Product Description
Modular cabinets with single or double door design. Available with or without mounting plate.
- Grounding per DIN EN 60439-1, grounding studs M8x20 on all moving and removable parts, as well as top and bottom panels.
- Flanged edges form rain gutter and prevent dust and water from entering the cabinet
- Doors with foamed gaskets; can be mounted at right or left side – standard is right side.
- 120° hidden hinges, which can be easily exchange with 180° hinges
- Locking with 3 mm double mandrel bolt
- With bolted reinforcement and attachment frame of solid square tubes perforated with 4.5 mm holes every 25 mm
- Top plate can be removed; 4 transport lugs M12 per DIN 580:2003-08
- Bottom with three-part , adjustable base plate and mounting holes 10.6 mm
- Mounting plates adjustable to depth every 25 mm. Quick and easy mounting via häwa locking brackets
- Excellent surface finish protection with improved pretreatment of the sheet metals by iron phosphatization and chrome-free repassivation as well as pollution free powder coating.

Technical Data
- Surface finish: Powder coated RAL 7035
- Metal thickness door: 2 mm; 14 ga
- Metal thickness frame: 2 mm; 14 ga
- Metal thickness rear wall: 2 mm; 14 ga
- Metal thickness Mounting plate: 2.5 mm; 12 ga

Further technical information ➜ page 33

Scope of Delivery
- Cabinet complete with hinged front door, bolted rear panel, lifting eyes, top and bottom cable entry plates and one key

Note
Other modifications are non stock items, price upon request

Accessories
- Connecting bolts ➜ page 33
- Mounting kits for grounding straps ➜ page 34
- Joining rubber gasket ➜ page 33
- Enhancement kits IP 56 for H395/H375 ➜ page 34
- Joining brackets ➜ page 33
- Joining flange adaptor ➜ page 34
- Connector ➜ page 33
- Base Cross rail ➜ page 35
- Side panel for H395 ➜ page 34
- Bases height 3.94“ for H390 and H395 ➜ page 35
- Bases height 7.87“ ➜ page 37
- Side doors ➜ page 34

Abmessung (BxHxT)		Gewicht		**Art. Nr.**	
mm	inch	kg	lbs	**without mounting plate**	**with mounting plate**
600 x 1.800 x 800	23,62 x 70,87 x 31,5	87	191,84	**0395-6018-82-07**	
600 x 1.800 x 800	23,62 x 70,87 x 31,5	106	233,73		**0395-6018-82-17**
600 x 2.000 x 800	23,62 x 78,74 x 31,5	103,5	228,22	**0395-6020-82-07**	
600 x 2.000 x 800	23,62 x 78,74 x 31,5	125	275,62		**0395-6020-82-17**
800 x 1.800 x 800	31,5 x 70,87 x 31,5	104,5	230,42	**0395-8018-82-07**	
800 x 1.800 x 800	31,5 x 70,87 x 31,5	131	288,86		**0395-8018-82-17**
800 x 2.000 x 800	31,5 x 78,74 x 31,5	108,5	239,24	**0395-8020-82-07**	
800 x 2.000 x 800	31,5 x 78,74 x 31,5	138	304,29		**0395-8020-82-17**

häwa

Technical Information

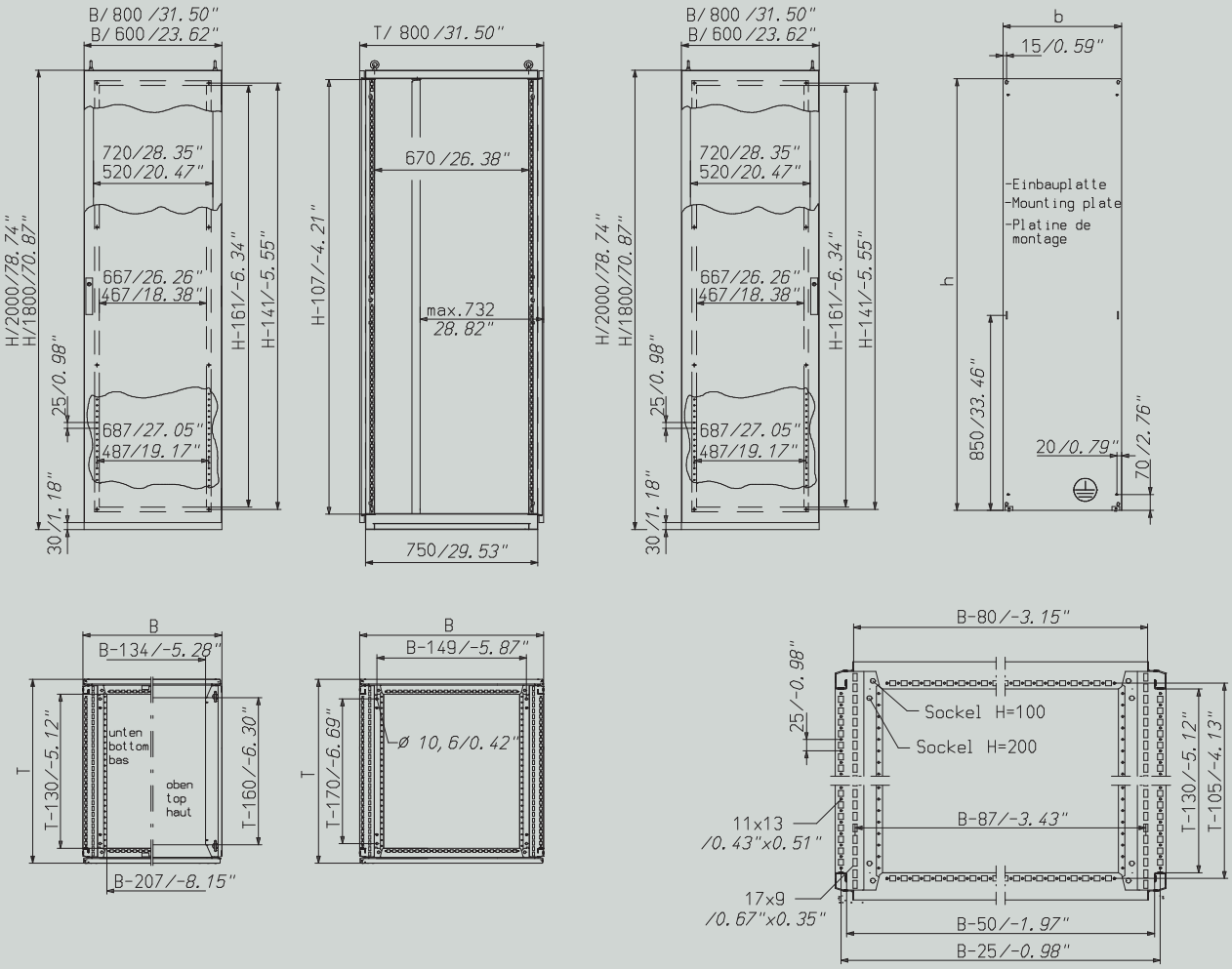

Accessories

Connector set Standard Details ➜ **page 189**

Description	Order No.
For modular installation of cabinets	**0396-7002-00-43**

Joining rubber gasket Details ➜ **page 174**

Description	Order No.
One-sided self-adhesive with oil-resistant adhesive	**3080-0102-18-00**

Connector set Details ➜ **page 189**

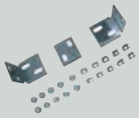

Description	Order No.
For modular installation of cabinets	**0396-7032-01-43**

Joining brackets Details ➜ **page 188**

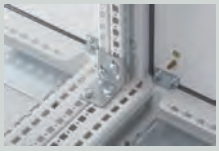

Description	Order No.
Brackets for joining adjacent modular cabinets.	**0396-0010-00-00**

Sheet steel

Joining flange adaptor Details ➜ **page 188**

Description	Order No.
For modular cabinet assembly.	**0396-0012-00-00**

Mounting kits for grounding straps Details ➜ **page 166**

Description	Order No.
For H375/H395 cabinets **Hardware for mounting grounding straps in häwa modular cabinets**	**3080-9036-03-95**

Side panel H395 Details ➜ **page 94**

Description	suitable for height		suitable for depth		Dimension HS		Dimension TS		Order No.
	mm	inch	mm	inch	mm	inch	mm	inch	
For installation of outward side panels of modular cabinets H395	1,800	70.87	800	31.5	1,796	70.71	750	29.53	**0396-7018-80-67**
	2,000	78.74	800	31.5	1,996	78.58	750	29.53	**0396-7020-80-67**

Enhancement kits IP 56 for H395/H375 Details ➜ **page 174**

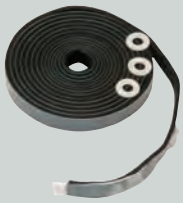

Description	Order No.
Gasket 10x2 mm, self-adhesive, and sealing washers, 11 mm diameter, for additional sealing of side panels and fittings **To increase IP rating from IP55 to IP56** **for all H395 and H375 modular cabinets**	**0396-7056-01-00**

Side doors Details ➜ **page 107**

Description	Dimensions		suitable for height		suitable for depth		Order No.
	mm	inch	mm	inch	mm	inch	
Fit H395 cabinets **With bolted reinforcement and attachment frame of solid square tubes perforated with 4.5 mm holes every 25 mm** **Seamless, foamed-in-place gasket for IP55 / NEMA 12 protection** **2 grounding studs M8x20**	1,800 x 800	70.87 x 31.5	1,800	70.87	800	31.5	**0395-8018-07-97**
	2,000 x 800	78.74 x 31.5	2,000	78.74	800	31.5	**0395-8020-07-97**

häwa

Bases height 3.94“ Details ➜ **page 95**

Description	Dimensions S		suitable for width		suitable for depth		Dimensions T		Order No.	
	mm	inch	mm	inch	mm	inch	mm	inch		with ventilation slots
For free-standing single and ganged-together modular cabinets Rugged U-profiles High lifting capacity	705	27.76	600	23.62	800	31.5	750	29.53	**0396-6001-80-17**	**0396-8001-80-37**
	705	27.76	800	31.5	800	31.5	750	29.53	**0396-8001-80-17**	
	705	27.76	600	23.62	800	31.5	750	29.53	**0396-6001-80-37**	

Bases height 7.87“ Details ➜ **page 98**

Description	suitable for width		suitable for depth		Dimensions T		Order No.	
	mm	inch	mm	inch	mm	inch		with ventilation slots
Quick and easy installation For free-standing single and ganged-together modular cabinets High lifting capacity	600	23.62	800	31.5	750	29.53	**0396.6002.80.17**	**0396.8002.80.37**
	800	31.5	800	31.5	750	29.53	**0396.8002.80.17**	
	600	23.62	800	31.5	750	29.53	**0396.6002.80.37**	

Base Cross rail Details ➜ **page 102**

	Description	suitable for depth		Order No.
		mm	inch	
	Base cross rail for installation in upper or lower section of 200 mm high base. Additional strengthening of ganged together bases To build multiple levels within base	800	31.5	**0396-0000-80-07**

Hex attachment screw Details ➜ **page 182**

	Order No.
	0348-7500-06-12

Hex-nut Verbus Tensilock Details ➜ **page 183**

	Description	Thread	Order No.
	Self-locking nuts for use without washer	M 6	**3003-9500-06-00**

H395 Cabinet for plug mounting 15.75“

Features
- Strong
- Easy to work with
- Modular
- Ingenious in detail

Product Description

Cabinet for plug mounting with single or double door design. Without mounting plate.
- Grounding per DIN EN 60439-1, grounding studs M8x20 on all moving and removable parts, as well as top and bottom panels.
- Flanged edges form rain gutter and prevent dust and water from entering the cabinet
- Doors with foamed gaskets; can be mounted at right or left side – standard is right side.
- 120° hidden hinges, which can be easily exchange with 180° hinges
- Locking with 3 mm double mandrel bolt
- With bolted reinforcement and attachment frame of solid square tubes perforated with 4.5 mm holes every 25 mm
- Top plate can be removed; 4 transport lugs M12 per DIN 580:2003-08
- Bottom with three-part , adjustable base plate and mounting holes 10.6 mm
- Mounting plates adjustable to depth every 25 mm. Quick and easy mounting via häwa locking brackets
- Excellent surface finish protection with improved pretreatment of the sheet metals by iron phosphatization and chrome-free repassivation as well as pollution free powder coating

Technical Data
- Material: Sheet steel
- Surface finish: Powder coated RAL 7035
- Metal thickness door: 2 mm; 14 ga
- Metal thickness frame: 2 mm; 14 ga
- Metal thickness rear wall: 1.5 mm; 16 ga

Further technical information ➜ below

Scope of Delivery
- Cabinet complete with hinged front door, bolted rear panel, lifting eyes, top and bottom cable entry plates and one key

Note

Fits modular cabinets type H395. Design in stainless steel or with other modifications available on request.

Accessories
- Bases height 7.87“ ➜ page 37
- Connecting bolts ➜ page 37
- Mounting kits for grounding straps ➜ page 37
- Joining rubber gasket ➜ page 37
- Joining brackets ➜ page 37
- Joining flange adaptor ➜ page 37
- Connector ➜ page 37

Dimensions (WxHxD)		Weight		**Order No.**
mm	inch	kg	lbs	**without mounting plate**
400 x 1,800 x 500	15.75 x 70.87 x 19.69	48	105.84	**0397-4018-50-07**
400 x 2,000 x 500	15.75 x 78.74 x 19.69	52	114.66	**0397-4020-50-07**
400 x 1,800 x 600	15.75 x 70.87 x 23.62	50	110.25	**0397-4018-60-07**
400 x 2,000 x 600	15.75 x 78.74 x 23.62	54	119.07	**0397-4020-60-07**

Technical Information

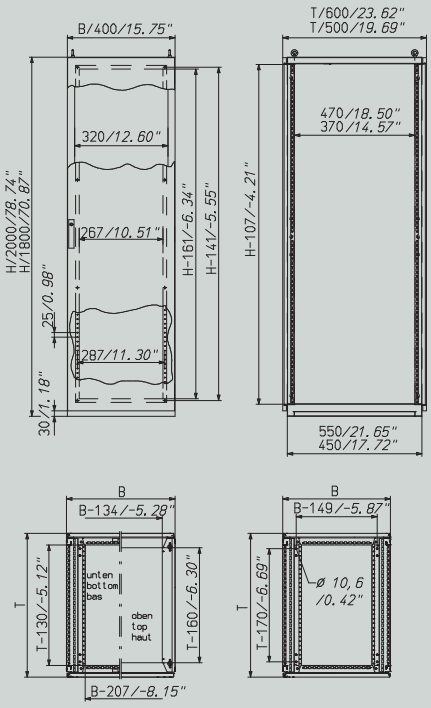

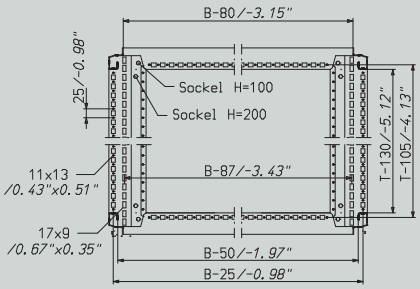

häwa

Accessories

Connector set Standard Details ➜ **page 189**

Description	Order No.
For modular installation of cabinets	0396-7002-00-43

Joining rubber gasket Details ➜ **page 174**

Description	Order No.
One-sided self-adhesive with oil-resistant adhesive	3080-0102-18-00

Connector set Details ➜ **page 189**

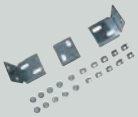

Description	Order No.
For modular installation of cabinets	0396-7032-01-43

Joining brackets Details ➜ **page 188**

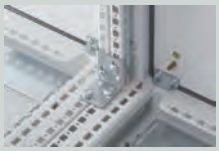

Description	Order No.
Brackets for joining adjacent modular cabinets.	0396-0010-00-00

Joining flange adaptor Details ➜ **page 188**

Description	Order No.
For modular cabinet assembly.	0396-0012-00-00

Mounting kits for grounding straps Details ➜ **page 166**

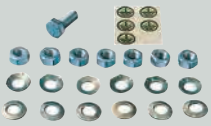

Description	Order No.
For H375/H395 cabinets Hardware for mounting grounding straps in häwa modular cabinets	3080-9036-03-95

Bases height 7.87“ Details ➜ **page 98**

Description	suitable for width		suitable for depth		Dimensions T		Order No.
	mm	inch	mm	inch	mm	inch	
Quick and easy installation For free-standing single and ganged-together modular cabinets High lifting capacity	400	15.75	500	19.69	450	17.72	0396.4002.50.17
	400	15.75	600	23.62	550	21.65	0396.4002.60.17

H 399 – Covering cabinet

Product Description

For accommodating panels with plug cut-outs

- Detachable cable entry plate. Standard version: roof-mounted. Base mounting is also possible.
- Hinged door: Mounted on right or left side with bar lock, standard version mounted on right side, rear side open
- Opening angle 120°
- Seal: Special foam seal
- Ground connection: On cabinet and door
- Open base for cable entry

Technical Data

- Material: Sheet steel
- Surface finish: Powder coated RAL 7035
- Metal thickness door: 1.5 mm; 16 ga
- Metal thickness frame: 1.5 mm; 16 ga

Further technical information ➜ below

Scope of Delivery

- Covering cabinet with mounting hardware M6x16 and tipping-cage nuts.
- Joining rubber gasket is to be ordered separately.

Note

For accommodating panels with plug cut-outs. Designed for 400/500/600 mm deep H395 cabinets.

Accessories

- Mounting kits for grounding straps ➜ page 39
- Panels with plug cut-outs ➜ page 39
- Connecting bolts ➜ page 39
- Joining rubber gasket ➜ page 39

Dimensions (WxHxD)		suitable for depth		Weight		**Order No.**
mm	inch	mm	inch	kg	lbs	
380 x 1.767 x 200	14,96 x 69,57 x 7,87	400	15,75	34	74,97	**0399-0218-40-07**
380 x 1.967 x 200	14,96 x 77,44 x 7,87	400	15,75	37	81,58	**0399-0220-40-07**
480 x 1.767 x 200	18,9 x 69,57 x 7,87	500	19,69	38	83,79	**0399-0218-50-07**
480 x 1.967 x 200	18,9 x 77,44 x 7,87	500	19,69	41	90,4	**0399-0220-50-07**
580 x 1.767 x 200	22,83 x 69,57 x 7,87	600	23,62	42	92,61	**0399-0218-60-07**
580 x 1.967 x 200	22,83 x 77,44 x 7,87	600	23,62	54	119,07	**0399-0220-60-07**

Technical Information

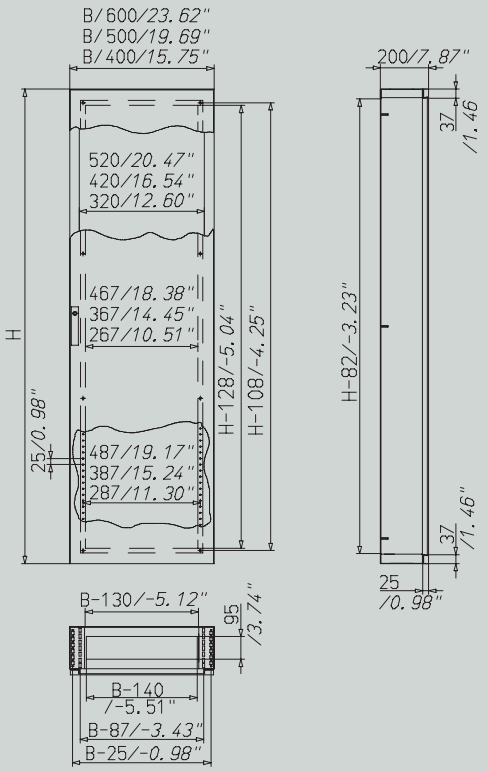

häwa

Accessories

Connector set Standard Details ➜ **page 189**

Description	Order No.
For modular installation of cabinets	0396-7002-00-43

Joining rubber gasket Details ➜ **page 174**

Description	Order No.
One-sided self-adhesive with oil-resistant adhesive	3080-0102-18-00

Mounting kits for grounding straps Details ➜ **page 166**

Description	Order No.
For H375/H395 cabinets Hardware for mounting grounding straps in häwa cabinets and modular cabinets	3080-9036-03-95

Panels with plug cut-outs Details ➜ **page 178**

Description	Hole dimension (a)		Dimensions		suitable for height		suitable for depth		Order No.
	mm	inch	mm	inch	mm	inch	mm	inch	
For covering cabinet type 0399	278	10.94	1,686 x 295	66.38 x 11.61	1,800	70.87	400	15.75	0396-0018-41-52
	278	10.94	1,886 x 295	74.25 x 11.61	2,000	78.74	400	15.75	0396-0020-41-52
	378	14.88	1,686 x 395	66.38 x 15.55	1,800	70.87	500	19.69	0396-0018-51-52
	378	14.88	1,886 x 395	74.25 x 15.55	2,000	78.74	500	19.69	0396-0020-51-52
	478	18.82	1,686 x 495	66.38 x 19.49	1,800	70.87	600	23.62	0396-0018-61-52
	478	18.82	1,886 x 495	74.25 x 19.49	2,000	78.74	600	23.62	0396-0020-61-52

H395 Distribution cabinet 15.75“

Features
- Strong
- Easy to work with
- Modular
- Ingenious in detail

Technical Data
- Surface finish: Powder coated RAL 7035
- Metal thickness door: 2 mm; 14 ga
- Approvals: cULus
- Protection type: IP559

Further technical information ➜ below

Scope of Delivery
- Cabinet complete with lifting eyes, top and bottom cable entry plates and one key.

Note
Rear hinged door, or other modifications are non stock items, price upon request

Accessories
- Connecting bolts ➜ page 41
- Mounting kits for grounding straps ➜ page 41
- Joining rubber gasket ➜ page 41
- Joining brackets ➜ page 41
- Joining flange adaptor ➜ page 41
- Connector ➜ page 41
- Cover set for mounting in distribution cabinets ➜ page 41
- Installation kit for mounting in distribution cabinets ➜ page 41

Dimensions (WxHxD)		Metal thickness frame		Weight		**Order No.**
mm	inch	mm	ga	kg	lbs	
600 x 2.000 x 400	23,62 x 78,74 x 15,75	1,5	16	68	149,94	**0395-6020-40-07**
850 x 2.000 x 400	33,46 x 78,74 x 15,75	2	14	82	180,81	**0395-8520-40-07**
1.100 x 2.000 x 400	43,31 x 78,74 x 15,75	2	14	105	231,52	**0395-1120-40-07** [2)]

[2)] with two doors

Technical Information

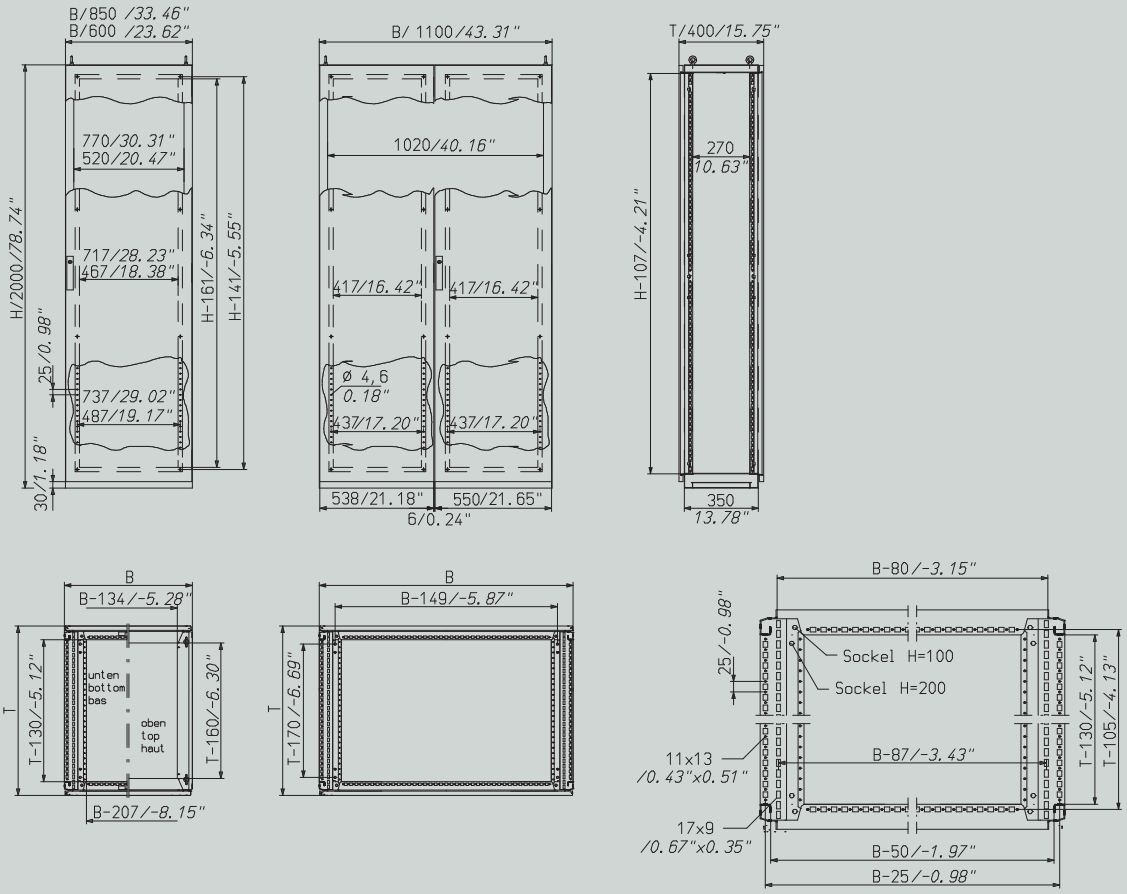

häwa

Accessories

Connector set Standard Details ➜ **page 189**

Description	Order No.
For modular installation of cabinets	**0396-7002-00-43**

Joining rubber gasket Details ➜ **page 174**

Description	Order No.
One-sided self-adhesive with oil-resistant adhesive	**3080-0102-18-00**

Connector set Details ➜ **page 189**

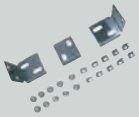

Description	Order No.
For modular installation of cabinets	**0396-7032-01-43**

Joining brackets Details ➜ **page 188**

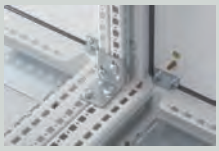

Description	Order No.
Brackets for joining adjacent modular cabinets.	**0396-0010-00-00**

Joining flange adaptor Details ➜ **page 188**

Description	Order No.
For modular cabinet assembly.	**0396-0012-00-00**

Mounting kits for grounding straps Details ➜ **page 166**

Description	Order No.
For H375/H395 cabinets **Hardware for mounting grounding straps in häwa modular cabinets**	**3080-9036-03-95**

Cover set for mounting distribution cabinets Details ➜ **page 195**

Description	suitable for width		Dimension LW		Order No.
	mm	inch	mm	inch	
The cover set inside the cabinet (containing one left, right, top and bottom cover) protects against accidental contact of live components. Suitable for covering at a pitch dimension of 9.84“.	600	23.62	520	20.47	**0394-7120-60-07**
	850	33.46	770	30.31	**0394-7120-85-07**
	1,100	43.31	1,020	40.16	**0394-7120-11-07**

Installation kit for mounting in distribution cabinets Details ➜ **page 194**

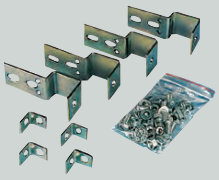

Description	suitable for widht		for type	Order No.
	mm	inch		
To secure mounting frames IVS of the following manufacturers in häwa cabinets	all		ABN-May&Steffens Striebel & John Vynckier	**0394-7004-02-00**
	600	23,62	Hager	**0394-7000-60-07**
	850	33,46	Hager	**0394-7000-85-07**
	1.100	43,31	Hager	**0394-7000-11-07**
	600	23,62	Klöckner-Moeller	**0395-7004-60-00**
	850	33,46	Klöckner-Moeller	**0394-7004-85-00**
	1.100	43,31	Klöckner-Moeller	**0394-7004-11-00**

Free-Standing cabinets H370, D-15.75“

Features
- Free-standing
- User-friendly characteristics
- Customizable through a variety of options

Product Description

Free-standing cabinets with single or double door design. Available with or without mounting plate. Mounting rails for utilization of häwa accessories available as option.
- Grounding studs M8x20 on all moving and removable parts, as well as top and bottom panels.
- Flanged edges form rain gutter and prevent dust and water from entering the cabinet
- Doors with foamed gaskets; can be mounted at right or left side – standard is right side.
- 120° hidden hinges, which can be easily exchanged with 180° hinges
- Locking with 3 mm double mandrel bolt
- With bolted reinforcement and attachment frame of solid square tubes perforated with 4.5 mm holes every 25 mm
- Top plate can be removed; 4 transport lugs M12 per DIN 580:2003-08
- Bottom with three-part , adjustable base plate and mounting holes 10.6 mm
- Mounting plates adjustable to depth every 25 mm. Quick and easy mounting via häwa locking brackets.

Technical Data
- Material: Stainless steel No. 1.4301
- Metal thickness door: 2 mm; 14 ga
- Metal thickness frame: 1.5 mm; 16 ga
- Metal thickness rear wall: 1.5 mm; 16 ga
- Approvals: cULus; GL

Further technical information ➜ page 43

Scope of Delivery
- Cabinet complete with lifting eyes, top and bottom cable entry plates and one key.

Note

Rear hinged door, or other modifications are non stock items, price upon request

Accessories
- Center attachment for H370/H390 ➜ page 45
- Mounting kits for grounding straps ➜ page 44
- Bases height 7.87“ ➜ page 44
- Bases height 7.87“ only for H370 Cabinets ➜ page 44
- Bases height 3.94“ ➜ page 44
- Bases height 3.94“ only for H370 Cabinets ➜ page 44
- Horizontal assembly rail ➜ page 45
- Vertical mounting rail ➜ page 45

Dimensions (WxHxD)		Metal thickness Mounting plate		Weight		**Order No.**	
mm	inch	mm	ga	kg	lbs	**without mounting plate**	**with mounting plate**
600 x 1.600 x 400	23,62 x 62,99 x 15,75	2,5	12	69,5	153,25	**0370-6016-40-00**	
600 x 1.600 x 400	23,62 x 62,99 x 15,75	2,5	12	86	189,63		**0370-6016-40-10**
600 x 1.800 x 400	23,62 x 70,87 x 15,75	2,5	12	75	165,38	**0370-6018-40-00**	
600 x 1.800 x 400	23,62 x 70,87 x 15,75	2,5	12	94	207,27		**0370-6018-40-10**
600 x 2.000 x 400	23,62 x 78,74 x 15,75	2,5	12	72,5	159,86	**0370-6020-40-00**	
600 x 2.000 x 400	23,62 x 78,74 x 15,75	2,5	12	103	227,12		**0370-6020-40-10**
800 x 1.600 x 400	31,5 x 62,99 x 15,75	2,5	12	82,5	181,91	**0370-8016-40-00**	
800 x 1.600 x 400	31,5 x 62,99 x 15,75	2,5	12	106	233,73		**0370-8016-40-10**
800 x 1.800 x 400	31,5 x 70,87 x 15,75	2,5	12	89,5	197,35	**0370-8018-40-00**	
800 x 1.800 x 400	31,5 x 70,87 x 15,75	2,5	12	116	255,78		**0370-8018-40-10**
800 x 2.000 x 400	31,5 x 78,74 x 15,75	2,5	12	96,5	212,78	**0370-8020-40-00**	
800 x 2.000 x 400	31,5 x 78,74 x 15,75	2,5	12	126	277,83		**0370-8020-40-10**
800 x 2.000 x 400	31,5 x 78,74 x 15,75	2,5	12	94	207,27	**0370-1016-40-00**	
1.000 x 1.600 x 400	39,37 x 62,99 x 15,75	3	11	129	284,44		**0370-1016-40-10**
1.000 x 1.800 x 400	39,37 x 70,87 x 15,75	3	11	104	229,32	**0370-1018-40-00** **0370-1118-40-00** [2)]	
1.000 x 1.800 x 400	39,37 x 70,87 x 15,75	3	11	144	317,52		**0370-1018-40-10** **0370-1118-40-10** [2)]

[2)] with two doors

Stainless steel

häwa

Dimensions (WxHxD)		Metal thickness Mounting plate		Weight		Order No.	
						without mounting plate	**with mounting plate**
mm	inch	mm	ga	kg	lbs		
1.000 x 2.000 x 400	39,37 x 78,74 x 15,75	3	11	112,5	248,06	**0370-1020-40-00** **0370-1120-40-00** [2)]	
1.000 x 2.000 x 400	39,37 x 78,74 x 15,75	3	11	157	346,18		**0370-1020-40-10** **0370-1120-40-10** [2)]
1.200 x 1.800 x 400	47,24 x 70,87 x 15,75	3	11	125	275,62	**0370-1218-40-00** [2)]	
1.200 x 1.800 x 400	47,24 x 70,87 x 15,75	3	11	173	381,46		**0370-1218-40-10** [2)]
1.200 x 2.000 x 400	47,24 x 78,74 x 15,75	3	11	136,5	300,98	**0370-1220-40-00** [2)]	
1.200 x 2.000 x 400	47,24 x 78,74 x 15,75	3	11	190	418,95		**0370-1220-40-10** [2)]

[2)] with two doors

Technical Information

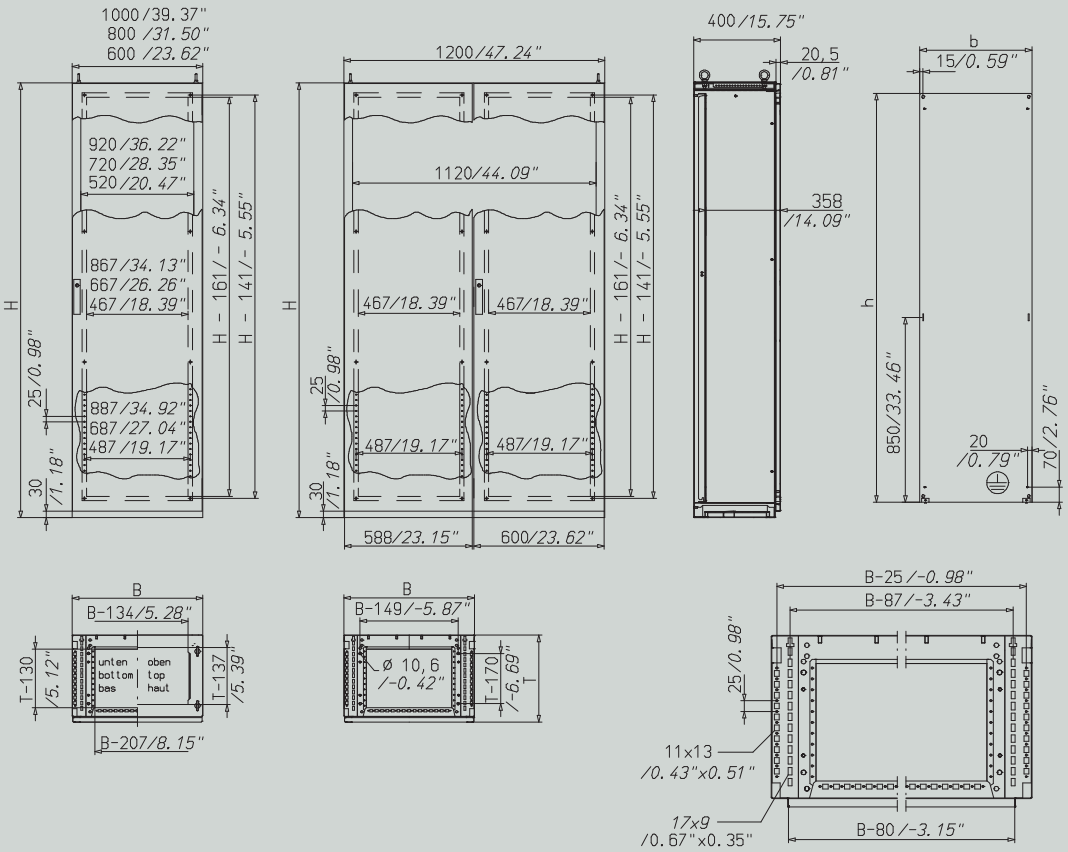

Accessories

Mounting kits for grounding straps Details ➜ **page 166**

Description	Order No.
For H370/H390 cabinets **Hardware for mounting grounding straps in häwa modular cabinets**	**3080-9036-03-90**

Bases height 3.94“ only for H370 Cabinets Details ➜ **page 120**

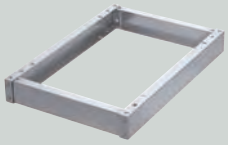

Description	Dimension S		suitable for width		suitable for depth		Dimension T		Order No.
	mm	inch	mm	inch	mm	inch	mm	inch	
For free-standing single and ganged-together modular cabinets **Rugged U-profiles** **High lifting capacity**	330	12.99	600	23.62	400	15.75	375	14.76	**0376-6001-41-11**
	330	12.99	800	31.5	400	15.75	375	14.76	**0376-8001-41-11**
	330	12.99	1,200	47.24	400	15.75	375	14.76	**0376-1201-41-11**

Bases height 7.87 Details ➜ **page 123**

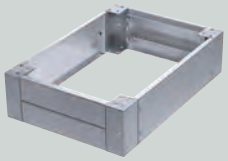

Description	suitable for width		suitable for depth		Dimension T		Order No.
	mm	inch	mm	inch	mm	inch	
Quick and easy installation **For free-standing single and ganged-together modular cabinets** **High lifting capacity**	600	23.62	400	15.75	350	13.78	**0376.6002.41.11**
	800	31.5	400	15.75	350	13.78	**0376.8002.41.11**
	1,000	39.37	400	15.75	350	13.78	**0376.1002.41.11**
	1,200	47.24	400	15.75	350	13.78	**0376.1202.41.11**

Bases height 3.94“ Details ➜ **page 119**

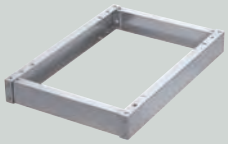

Description	Hole dimensi-on (a)		suitable for width		suitable for depth		Dimension T		Order No.
	mm	inch	mm	inch	mm	inch	mm	inch	
For free-standing single and ganged-together modular cabinets **Rugged U-profiles** **High lifting capacity**	305	12.01	600	23.62	400	15.75	350	13.78	**0376-6001-40-11**
	305	12.01	800	31.5	400	15.75	350	13.78	**0376-8001-40-11**
	305	12.01	1,000	39.37	400	15.75	350	13.78	**0376-1001-40-11**
	305	12.01	1,200	47.24	400	15.75	350	13.78	**0376-1201-40-11**

Bases height 7.87“ Details ➜ **page 121**

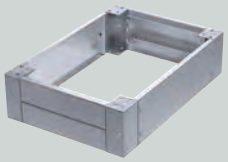

Description	suitable for width		suitable for depth		Dimension T		Order No.
	mm	inch	mm	inch	mm	inch	
Quick and easy installation **For free-standing single and ganged-together modular cabinets** **High lifting capacity**	600	23.62	400	15.75	350	13.78	**0376.6002.40.11**
	800	31.5	400	15.75	350	13.78	**0376.8002.40.11**
	1,000	39.37	400	15.75	350	13.78	**0376.1002.40.11**
	1,200	47.24	400	15.75	350	13.78	**0376.1202.40.11**

häwa

Center attachment for H370/H390 Details ➜ **page 141**

Description	length mm	length inch	Order No.
For direct mounting to the side panel (without rail)	353	13.9	**0391-0003-40-00**

Hex-nut Verbus Tensilock Details ➜ **page 183**

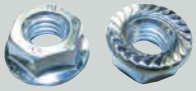

Description	Thread	Order No.
Self-locking nuts for use without washer	M 8	**3003-9500-08-00**

Vertical assembly rail Details ➜ **page 132**

Description	suitable for height mm	suitable for height inch	Order No.
Increases versatility of H370/H390 cabinets includes mounting hardware includes grounding bolt M8 forms the vertical mounting platform for all accessories in the H370 and H390 cabinets	1,600	62.99	**0391-9016-00-03**
	1,800	70.87	**0391-9018-00-03**
	2,000	78.74	**0391-9020-00-03**

Horizontal assembly rail Details ➜ **page 133**

Description	suitable for width mm	suitable for width inch	Order No.
Increases versatility of H370/H390 cabinets includes mounting hardware includes grounding bolt M8 forms the vertical mounting platform for all accessories in the H370 and H390 cabinets	600	23.62	**0391-9000-06-03**
	800	31.5	**0391-9000-08-03**
	1,000	39.37	**0391-9000-10-03**
	1,200	47.24	**0391-9000-12-03**

Free-Standing cabinets H370, D-19.69“

Features
- Free-standing
- User-friendly characteristics
- Customizable through a variety of options

Product Description

Free-standing cabinets with single or double door design. Available with or without mounting plate. Mounting rails for utilization of häwa accessories available as option.
- Grounding studs M8x20 on all moving and removable parts, as well as top and bottom panels.
- Flanged edges form rain gutter and prevent dust and water from entering the cabinet
- Doors with foamed gaskets; can be mounted at right or left side – standard is right side.
- 120° hidden hinges, which can be easily exchange with 180° hinges
- Locking with 3 mm double mandrel bolt
- With bolted reinforcement and attachment frame of solid square tubes perforated with 4.5 mm holes every 25 mm
- Top plate can be removed; 4 transport lugs M12 per DIN 580:2003-08
- Bottom with three-part , adjustable base plate and mounting holes 10.6 mm
- Mounting plates adjustable to depth every 25 mm. Quick and easy mounting via häwa locking brackets.

Technical Data
- Material: Stainless steel No. 1.4301
- Metal thickness door: 2 mm; 14 ga
- Metal thickness frame: 1.5 mm; 16 ga
- Metal thickness rear wall: 1.5 mm; 16 ga
- Approvals: cULus; GL

Further technical information ➜ page 47

Note

Rear hinged door, or other modifications are non stock items, price upon request

Accessories
- Mounting kits for grounding straps ➜ page 47
- Bases height 3.94“ ➜ page 48
- Bases height 7.87“ ➜ page 48
- Bases height 7.87“ only for H370 Cabinets ➜ page 47
- Bases height 3.94“ only for H370 Cabinets ➜ page 47
- Horizontal assembly rail ➜ page 48
- Center attachment for H370/H390 ➜ page 48
- Vertical mounting rail ➜ page 48

Dimensions (WxHxD)		Metal thickness Mounting plate		Weight		Order No.	
						without mounting plate	**with mounting plate**
mm	inch	mm	ga	kg	lbs		
600 x 1.800 x 500	23,62 x 70,87 x 19,69	2,5	12	81	178,6	**0370-6018-50-00**	
600 x 1.800 x 500	23,62 x 70,87 x 19,69	2,5	12	100	220,5		**0370-6018-50-10**
600 x 2.000 x 500	23,62 x 78,74 x 19,69	2,5	12	87,5	192,94	**0370-6020-50-00**	
600 x 2.000 x 500	23,62 x 78,74 x 19,69	2,5	12	109	240,34		**0370-6020-50-10**
800 x 1.800 x 500	31,5 x 70,87 x 19,69	2,5	12	94,5	208,37	**0370-8018-50-00**	
800 x 1.800 x 500	31,5 x 70,87 x 19,69	2,5	12	121	266,8		**0370-8018-50-10**
800 x 2.000 x 500	31,5 x 78,74 x 19,69	2,5	12	103,5	228,22	**0370-8020-50-00**	
800 x 2.000 x 500	31,5 x 78,74 x 19,69	2,5	12	133	293,26		**0370-8020-50-10**
1.000 x 1.600 x 500	39,37 x 62,99 x 19,69	3	11	96	211,68	**0370-1016-50-00**	
1.000 x 1.600 x 500	39,37 x 62,99 x 19,69	3	11	131	288,86		**0370-1016-50-10**
1.000 x 1.800 x 500	39,37 x 70,87 x 19,69	3	11	115	253,58	**0370-1018-50-00**	
1.000 x 1.800 x 500	39,37 x 70,87 x 19,69	3	11	155	341,78		**0370-1018-50-10**
1.000 x 2.000 x 500	39,37 x 78,74 x 19,69	3	11	112,5	248,06	**0370-1020-50-00**	
1.000 x 2.000 x 500	39,37 x 78,74 x 19,69	3	11	157	346,18		**0370-1020-50-10**
1.200 x 1.800 x 500	47,24 x 70,87 x 19,69	3	11	117	257,98	**0370-1218-50-00** [2]	
1.200 x 1.800 x 500	47,24 x 70,87 x 19,69	3	11	165	363,82		**0370-1218-50-10** [2]
1.200 x 2.000 x 500	47,24 x 78,74 x 19,69	3	11	126,5	278,93	**0370-1220-50-00** [2]	
1.200 x 2.000 x 500	47,24 x 78,74 x 19,69	3	11	180	396,9		**0370-1220-50-10** [2]

[2] with two doors

häwa

Technical Information

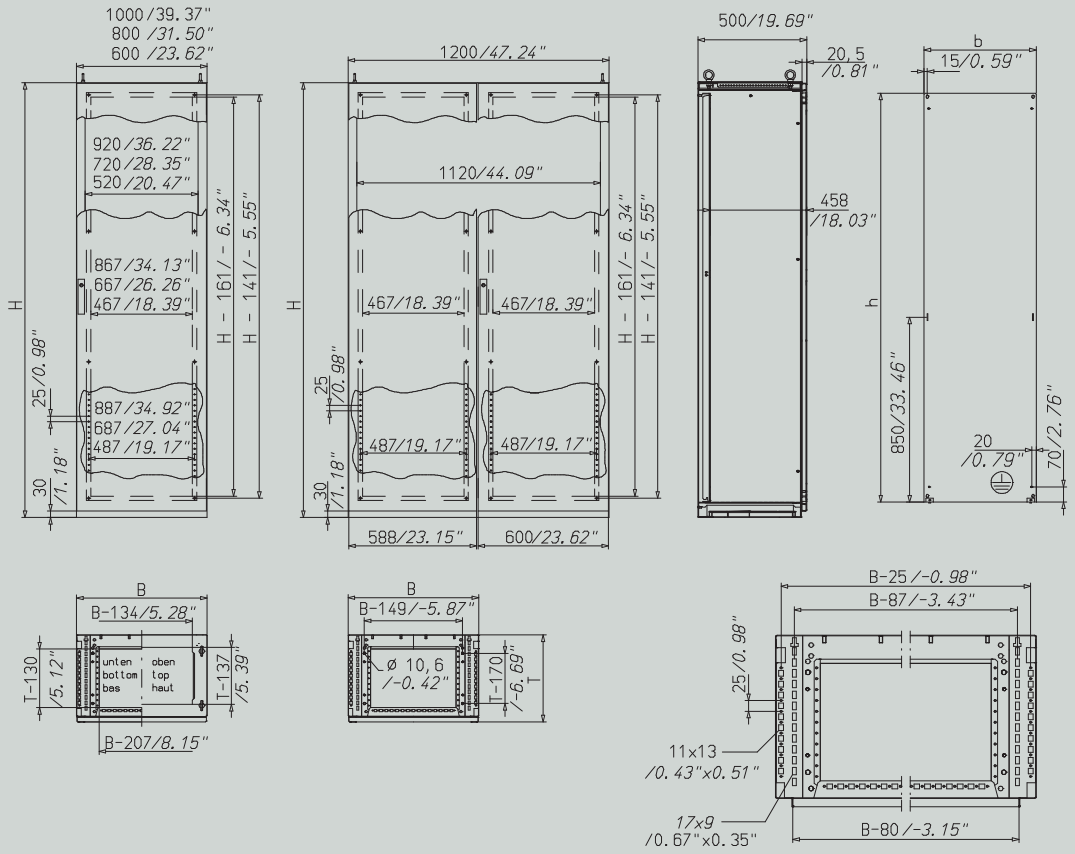

Accessories

Mounting kits for grounding straps Details ➜ **page 166**

Description	Order No.
For H370/H390 cabinets **Hardware for mounting groundings straps in häwa modular cabinets**	**3080-9036-03-90**

Bases height 3.94“ only for H370 Cabinets Details ➜ **page 120**

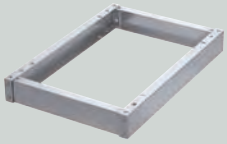

Description	Dimension S		suitable for width		suitable for depth		Dimension T		Order No.
	mm	inch	mm	inch	mm	inch	mm	inch	
For free-standing single and ganged-together modular cabinets **Rugged U-profiles** **High lifting capacity**	430	16.93	600	23.62	500	19.69	475	18.7	**0376-6001-51-11**
	430	16.93	800	31.5	500	19.69	475	18.7	**0376-8001-51-11**
	430	16.93	1,000	39.37	500	19.69	475	18.7	**0376-1001-51-11**
	430	16.93	1,200	47.24	500	19.69	475	18.7	**0376-1201-51-11**

Bases height 7.87“ only for H370 Cabinets Details ➜ **page 123**

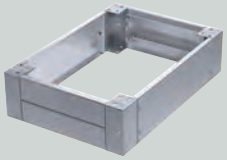

Description	suitable for width		suitable for depth		Dimension T		Order No.
	mm	inch	mm	inch	mm	inch	
Quick and easy installation **For free-standing single and ganged-together modular cabinets** **High lifting capacity**	600	23.62	500	19.69	450	17.72	**0376.6002.51.11**
	800	31.5	500	19.69	450	17.72	**0376.8002.51.11**
	1,000	39.37	500	19.69	450	17.72	**0376.1002.51.11**
	1,200	47.24	500	19.69	450	17.72	**0376.1202.51.11**

Stainless steel

Bases height 3.94“ Details ➜ **page 119**

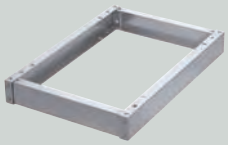

Description	Hole dimension (a)		suitable for width		suitable for depth		Dimension T		Order No.
	mm	inch	mm	inch	mm	inch	mm	inch	
For free-standing single and ganged-together modular cabinets Rugged U-profiles High lifting capacity	305	12.01	1,000	39.37	500	19.69	350	13.78	**0376-1001-50-11**
	305	12.01	1,200	47.24	500	19.69	350	13.78	**0376-1201-50-11**
	305	12.01	600	23.62	500	19.69	350	13.78	**0376-6001-50-11**
	305	12.01	800	31.5	500	19.69	350	13.78	**0376-8001-50-11**

Bases height 7.87“ Details ➜ **page 121**

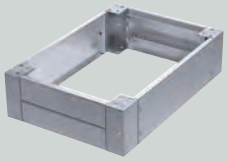

Description	suitable for width		suitable for depth		Dimension T		Order No.
	mm	inch	mm	inch	mm	inch	
Quick and easy installation For free-standing single and ganged-together modular cabinets High lifting capacity	1,000	39.37	400	15.75	350	13.78	**0376.1002.40.11**
	600	23.62	500	19.69	450	17.72	**0376.6002.50.11**
	800	31.5	500	19.69	450	17.72	**0376.8002.50.11**
	1,000	39.37	500	19.69	450	17.72	**0376.1002.50.11**
	1,200	47.24	500	19.69	450	17.72	**0376.1202.50.11**

Center attachment for H370/H390 Details ➜ **page 141**

Description	length		Order No.
	mm	inch	
For direct mounting to the side panel (without rail)	453	17.83	**0391-0003-50-00**

Hex-nut Verbus Tensilock Details ➜ **page 183**

Description	Thread	Order No.
Self-locking nuts for use without washer	M 8	**3003-9500-08-00**

Vertical assembly rail Details ➜ **page 132**

Description	suitable for height		Order No.
	mm	inch	
Increases versatility of H370/H390 cabinets includes mounting hardware includes grounding bolt M8 forms the vertical mounting platform for all accessories in the H370 and H390 cabinets	1,600	62.99	**0391-9016-00-03**
	1,800	70.87	**0391-9018-00-03**
	2,000	78.74	**0391-9020-00-03**

Horizontal assembly rail Details ➜ **page 133**

Description	suitable for width		Order No.
	mm	inch	
Increases versatility of H370/H390 cabinets includes mounting hardware includes grounding bolt M8 forms the vertical mounting platform for all accessories in the H370 and H390 cabinets	600	23.62	**0391-9000-06-03**
	800	31.5	**0391-9000-08-03**
	1,000	39.37	**0391-9000-10-03**
	1,200	47.24	**0391-9000-12-03**

häwa

Free-Standing cabinets H370, D-23.62“

Features
- Free-standing
- User-friendly characteristics
- Customizable through a variety of options

Product Description

Free-standing cabinets with single or double door design. Available with or without mounting plate. Mounting rails for utilization of häwa accessories available as option.
- Grounding studs M8x20 on all moving and removable parts, as well as top and bottom panels.
- Flanged edges form rain gutter and prevent dust and water from entering the cabinet
- Doors with foamed gaskets; can be mounted at right or left side – standard is right side.
- 120° hidden hinges, which can be easily exchange with 180° hinges
- Locking with 3 mm double mandrel bolt
- With bolted reinforcement and attachment frame of solid square tubes perforated with 4.5 mm holes every 25 mm
- Top plate can be removed; 4 transport lugs M12 per DIN 580:2003-08
- Bottom with three-part , adjustable base plate and mounting holes 10.6 mm
- Mounting plates adjustable to depth every 25 mm. Quick and easy mounting via häwa locking brackets.

Technical Data
- Material: Stainless steel No. 1.4301
- Metal thickness door: 2 mm; 14 ga
- Metal thickness frame: 1.5 mm; 16 ga
- Metal thickness rear wall: 1.5 mm; 16 ga
- Approvals: cULus; GL

Further technical information ➜ page 50

Note

Rear hinged door, or other modifications are non stock items, price upon request

Accessories
- Mounting kits for grounding straps ➜ page 50
- Bases height 3.94“ ➜ page 51
- Bases height 7.87“ ➜ page 51
- Bases height 7.87“ only for H370 Cabinets ➜ page 50
- Bases height 3.94“ only for H370 Cabinets ➜ page 50
- Horizontal assembly rail ➜ page 51
- Vertical mounting rail ➜ page 51
- Center attachment for H370/H390 ➜ page 51

Dimensions (WxHxD)		Metal thickness Mounting plate		Weight		Order No.	
mm	inch	mm	ga	kg	lbs	without mounting plate	with mounting plate
600 x 1.800 x 600	23,62 x 70,87 x 23,62	2,5	12	88	194,04	**0370-6018-60-00**	
600 x 1.800 x 600	23,62 x 70,87 x 23,62	2,5	12	107	235,94		**0370-6018-60-10**
600 x 2.000 x 600	23,62 x 78,74 x 23,62	2,5	12	94,5	208,37	**0370-6020-60-00**	
600 x 2.000 x 600	23,62 x 78,74 x 23,62	2,5	12	116	255,78		**0370-6020-60-10**
800 x 1.800 x 600	31,5 x 70,87 x 23,62	2,5	12	102,5	226,01	**0370-8018-60-00**	
800 x 1.800 x 600	31,5 x 70,87 x 23,62	2,5	12	129	284,44		**0370-8018-60-10**
800 x 2.000 x 600	31,5 x 78,74 x 23,62	2,5	12	111,5	245,86	**0370-8020-60-00**	
800 x 2.000 x 600	31,5 x 78,74 x 23,62	2,5	12	141	310,9		**0370-8020-60-10**
1.200 x 1.800 x 600	47,24 x 70,87 x 23,62	3	11	125	275,62	**0370-1218-60-00** [2]	
1.200 x 1.800 x 600	47,24 x 70,87 x 23,62	3	11	173	381,46		**0370-1218-60-10** [2]
1.200 x 2.000 x 600	47,24 x 78,74 x 23,62	3	11	135,5	298,78	**0370-1220-60-00** [2]	
1.200 x 2.000 x 600	47,24 x 78,74 x 23,62	3	11	189	416,74		**0370-1220-60-10** [2]

[2] with two doors

Stainless steel

Technical Information

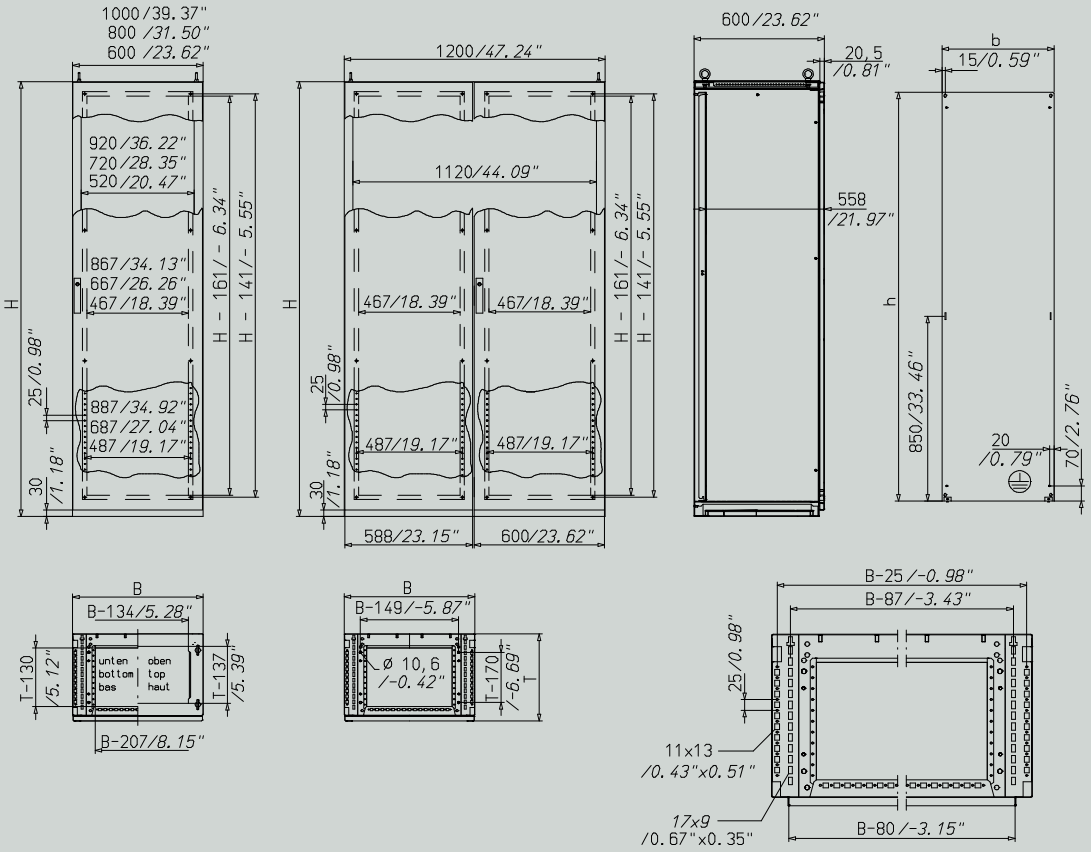

Accessories

Mounting kits for grounding straps Details ➜ **page 166**

Description	Order No.
For H370/H390 cabinets **Hardware for mounting groundings straps in häwa modular cabinets**	**3080-9036-03-90**

Bases height 3.94“ Details ➜ **page 120**

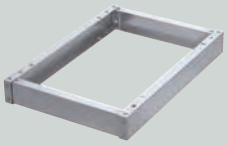

Description	Dimension S		suitable for width		suitable for depth		Dimension T		Order No.
	mm	inch	mm	inch	mm	inch	mm	inch	
For free-standing single and ganged-together modular cabinets **Rugged U-profiles** **High lifting capacity.**	530	20.87	600	23.62	600	23.62	575	22.64	**0376-6001-61-11**
	530	20.87	800	31.5	600	23.62	575	22.64	**0376-8001-61-11**
	530	20.87	1,000	39.37	600	23.62	575	22.64	**0376-1001-61-11**
	530	20.87	1,200	47.24	600	23.62	575	22.64	**0376-1201-61-11**

Bases height 7.87“ only for H370 Cabinets Details ➜ **page 123**

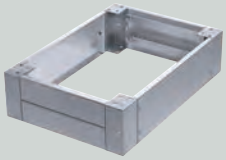

Description	suitable for width		suitable for depth		Dimension T		Order No.
	mm	inch	mm	inch	mm	inch	
Quick and easy installation **For free-standing single and ganged-together modular cabinets** **High lifting capacity**	600	23.62	600	23.62	550	21.65	**0376.6002.61.11**
	800	31.5	600	23.62	550	21.65	**0376.8002.61.11**
	1,200	47.24	600	23.62	550	21.65	**0376.1002.61.11**
	1,200	47.24	600	23.62	550	21.65	**0376.1202.61.11**

Stainless steel

Bases height 3.94“ Details ➜ **page 119**

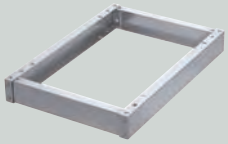

Description	Hole dimension (a)		suitable for width		suitable for depth		Dimension T		Order No.
	mm	inch	mm	inch	mm	inch	mm	inch	
For free-standing single and ganged-together modular cabinets Rugged U-profiles High lifting capacity.	505	19.88	600	23.62	600	23.62	550	21.65	**0376-6001-60-11**
	505	19.88	800	31.5	600	23.62	550	21.65	**0376-8001-60-11**
	505	19.88	1,200	47.24	600	23.62	550	21.65	**0376-1201-60-11**

Bases height 7.87“ Details ➜ **page 121**

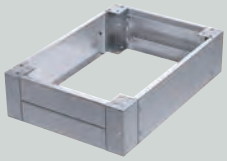

Description	suitable for width		suitable for depth		Dimension T		Order No.
	mm	inch	mm	inch	mm	inch	
Quick and easy installation For free-standing single and ganged-together modular cabinets High lifting capacity	600	23.62	600	23.62	550	21.65	**0376.6002.60.11**
	800	31.5	600	23.62	550	21.65	**0376.8002.60.11**
	1,200	47.24	600	23.62	550	21.65	**0376.1202.60.11**

Center attachment for H370/H390 Details ➜ **page 141**

Description	length		Order No.
	mm	inch	
For direct mounting to the side panel (without rail)	553	21.77	**0391-0003-60-00**

Hex-nut Verbus Tensilock Details ➜ **page 183**

Description	Thread	Order No.
Self-locking nuts for use without washer	M 8	**3003-9500-08-00**

Vertical assembly rail Details ➜ **page 132**

Description	suitable for height		Order No.
	mm	inch	
Increases versatility of H370/H390 cabinets includes mounting hardware includes grounding bolt M8 forms the vertical mounting platform for all accessories in the H370 and H390 cabinets	1,800	70.87	**0391-9018-00-03**
	2,000	78.74	**0391-9020-00-03**

Horizontal assembly rail Details ➜ **page 133**

Description	suitable for width		Order No.
	mm	inch	
Increases versatility of H370/H390 cabinets includes mounting hardware includes grounding bolt M8 forms the vertical mounting platform for all accessories in the H370 and H390 cabinets	600	23.62	**0391-9000-06-03**
	800	31.5	**0391-9000-08-03**
	1,200	47.24	**0391-9000-12-03**

Modular cabinets H375, D-15.75“

Features
- Strong
- Easy to work with
- Modular
- Ingenious in detail

Product Description

Free-standing cabinets with single or double door design. Available with or without mounting plate.
- Grounding studs M8x20 on all moving and removable parts, as well as top and bottom panels.
- Flanged edges form rain gutter and prevent dust and water from entering the cabinet
- Doors with foamed gaskets; can be mounted at right or left side – standard is right side.
- 120° hidden hinges, which can be easily exchanged with 180° hinges
- Locking with 3 mm double mandrel bolt
- With bolted reinforcement and attachment frame of solid square tubes perforated with 4.5 mm holes every 25 mm
- Top plate can be removed; 4 transport lugs M12 per DIN 580:2003-08
- Bottom with three-part , adjustable base plate and mounting holes 10.6 mm
- Mounting plates adjustable to depth every 25 mm. Quick and easy mounting via häwa locking brackets

Technical Data
- Material: Stainless steel No. 1.4301
- Surface finish: Stainless steel No. 1.4301
- Metal thickness door: 2 mm; 14 ga
- Metal thickness frame: 2 mm; 14 ga
- Metal thickness rear wall: 1.5 mm; 16 ga
- Approvals: cULus; GL
- Protection type: IP55

Further technical information ➜ page 53

Scope of Delivery
- Cabinet complete with hinged front door, bolted rear panel, lifting eyes, top and bottom cable entry plates and one key

Accessories
- Connecting bolts ➜ page 53
- Mounting kits for grounding straps ➜ page 54
- Joining rubber gasket ➜ page 53
- Enhancement kits IP 56 for H395/H375 ➜ page 54
- Joining brackets ➜ page 53
- Joining flange adaptor ➜ page 54
- Connector ➜ page 53
- Bases height 7.87“ ➜ page 54
- Bases height 3.94“ ➜ page 54
- Side panel for H375 ➜ page 54

Dimensions (WxHxD)		Metal thickness Mounting plate		Weight		Order No.	
mm	inch	mm	ga	kg	lbs	without mounting plate	with mounting plate
600 x 1.800 x 400	23,62 x 70,87 x 15,75	2,5	12	194	427,77	**0375-6018-40-00**	
600 x 1.800 x 400	23,62 x 70,87 x 15,75	2,5	12	88	194,04		**0375-6018-40-10**
600 x 2.000 x 400	23,62 x 78,74 x 15,75	2,5	12			**0375-6020-40-00**	
600 x 2.000 x 400	23,62 x 78,74 x 15,75	2,5	12	103	227,12		**0375-6020-40-10**
800 x 1.800 x 400	31,5 x 70,87 x 15,75	2,5	12			**0375-8018-40-00**	
800 x 1.800 x 400	31,5 x 70,87 x 15,75	2,5	12	119	262,4		**0375-8018-40-10**
800 x 2.000 x 400	31,5 x 78,74 x 15,75	2,5	12			**0375-8020-40-00**	
800 x 2.000 x 400	31,5 x 78,74 x 15,75	2,5	12	127	280,04		**0375-8020-40-10**
1.000 x 1.600 x 400	39,37 x 62,99 x 15,75	3	11			**0375-1016-40-00** **0375-1116-40-00** [2]	
1.000 x 1.600 x 400	39,37 x 62,99 x 15,75	3	11	140	308,7		**0375-1016-40-10** **0375-1116-40-10** [2]
1.000 x 1.800 x 400	39,37 x 70,87 x 15,75	3	11			**0375-1018-40-00** **0375-1118-40-00** [2]	
1.000 x 1.800 x 400	39,37 x 70,87 x 15,75	3	11	157	346,18		**0375-1018-40-10** **0375-1118-40-10** [2]
1.000 x 2.000 x 400	39,37 x 78,74 x 15,75					**0375-1020-40-00** **0375-1120-40-00** [2]	
1.000 x 2.000 x 400	39,37 x 78,74 x 15,75	3	11	166	366,03		**0375-1020-40-10** **0375-1120-40-10** [2]
1.200 x 1.800 x 400	47,24 x 70,87 x 15,75					**0375-1218-40-00** [2]	
1.200 x 1.800 x 400	47,24 x 70,87 x 15,75	3	11	177	390,28		**0375-1218-40-10** [2]
1.200 x 2.000 x 400	47,24 x 78,74 x 15,75					**0375-1220-40-00** [2]	
1.200 x 2.000 x 400	47,24 x 78,74 x 15,75	3	11	193	425,56		**0375-1220-40-10** [2]

[2] with two doors

häwa

Technical Information

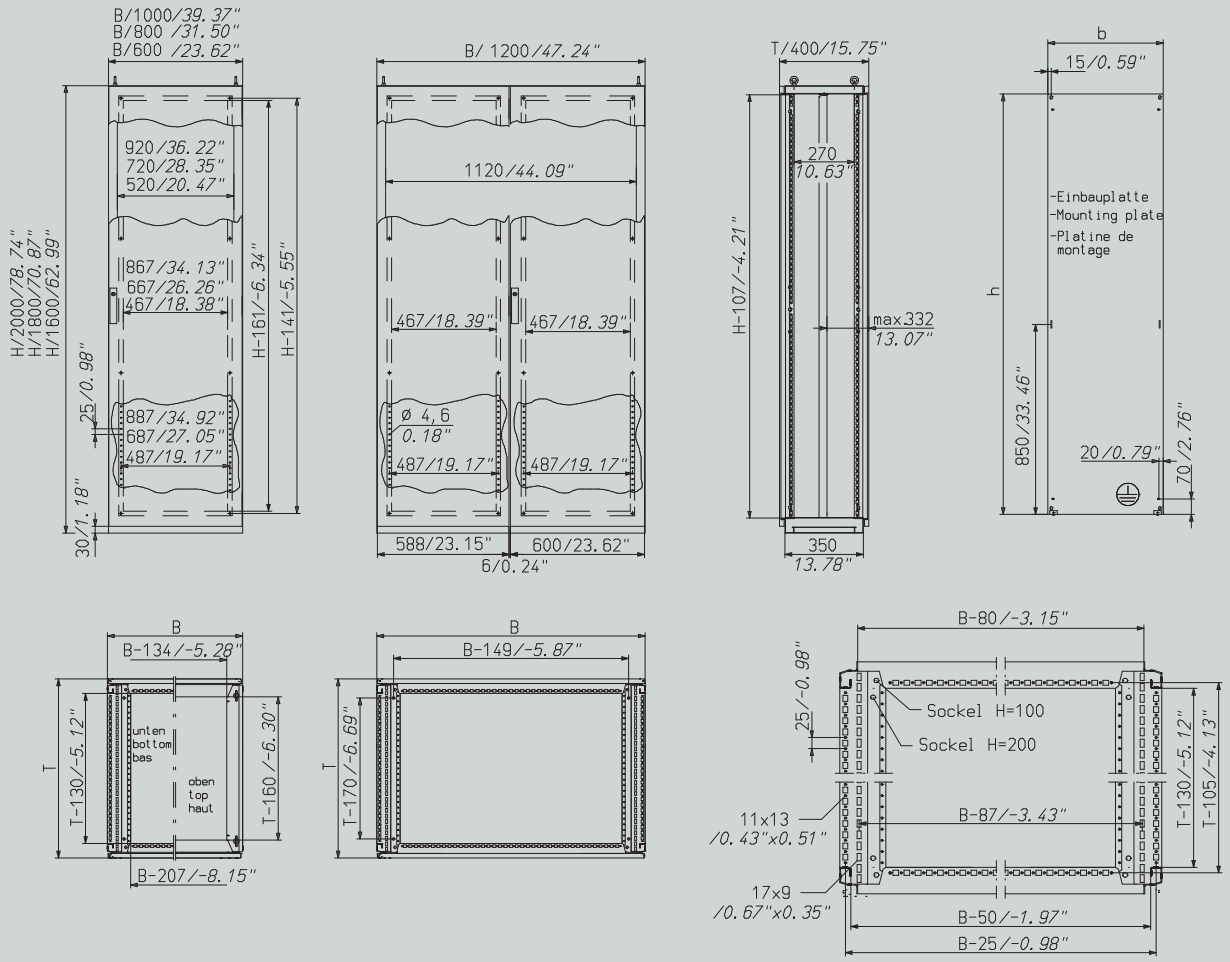

Accessories

Connector set Standard Details ➜ **page 189**

Description	Order No.
For modular installation of cabinets	**0376-7002-00-43**

Joining rubber gasket Details ➜ **page 174**

Description	Order No.
One-sided self-adhesive with oil-resistant adhesive	**3080-0102-18-00**

Connector set Details ➜ **page 189**

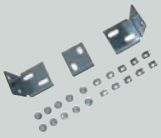

Description	Order No.
For modular installation of cabinets	**0396-7032-01-43**

Joining brackets Details ➜ **page 188**

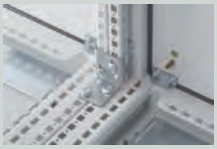

Description	Order No.
Brackets for joining adjacent modular cabinets.	**0396-0010-00-00**

Stainless steel

Joining flange adaptor Details ➜ **page 188**

Description	Order No.
For modular cabinet assembly.	**0396-0012-00-00**

Mounting kits for grounding straps Details ➜ **page 166**

Description	Order No.
For H375/H395 cabinets **Hardware for mounting grounding straps in häwa modular cabinets**	**3080-9036-03-95**

Bases height 3.94“ Details ➜ **page 119**

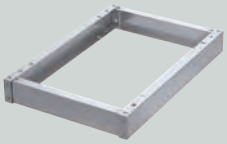

Description	Hole dimension (a)		suitable for width		suitable for depth		Dimension T		Order No.
	mm	inch	mm	inch	mm	inch	mm	inch	
For free-standing single and ganged-together modular cabinets **Rugged U-profiles** **High lifting capacity.**	305	12.01	600	23.62	400	15.75	350	13.78	**0376-6001-40-11**
	305	12.01	800	31.5	400	15.75	350	13.78	**0376-8001-40-11**
	305	12.01	1,000	39.37	400	15.75	350	13.78	**0376-1001-40-11**
	305	12.01	1,200	47.24	400	15.75	350	13.78	**0376-1201-40-11**

Bases height 7.87“ Details ➜ **page 121**

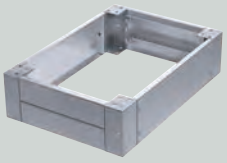

Description	suitable for width		suitable for depth		Dimension T		Order No.
	mm	inch	mm	inch	mm	inch	
Quick and easy installation **For free-standing single and ganged-together modular cabinets** **High lifting capacity**	600	23.62	400	15.75	350	13.78	**0376.6002.40.11**
	800	31.5	400	15.75	350	13.78	**0376.8002.40.11**
	1,000	39.37	400	15.75	350	13.78	**0376.1002.40.11**
	1,200	47.24	400	15.75	350	13.78	**0376.1202.40.11**

Side panel for H375 Details ➜ **page 118**

Description	suitable for height		suitable for depth		Dimension HS		Dimension TS		Order No.
	mm	inch	mm	inch	mm	inch	mm	inch	
For installation of outward side panels of modular cabinets H375	1,600	62.99	400	15.75	1,596	62.83	350	13.78	**0376-7016-40-61**
	1,800	70.87	400	15.75	1,796	70.71	350	13.78	**0376-7018-40-61**
	2,000	78.74	400	15.75	1,996	78.58	350	13.78	**0376-7020-40-61**

Enhancement kits IP 56 for H395/H375 Details ➜ **page 174**

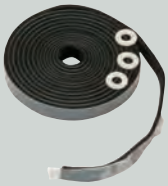

Description	Order No.
Gasket 10x2 mm, self-adhesive, and sealing washers, 11 mm diameter, for additional sealing of side panels and fittings **To increase IP rating from IP55 to IP56** **for all H395 and H375 modular cabinets**	**0396-7056-01-00**

häwa

Modular cabinets H375, D-19.69“

Product Description

Free-standing cabinets with single or double door design. Available with or without mounting plate.

- Grounding studs M8x20 on all moving and removable parts, as well as top and bottom panels.
- Flanged edges form rain gutter and prevent dust and water from entering the cabinet
- Doors with foamed gaskets; can be mounted at right or left side – standard is right side.
- 120° hidden hinges, which can be easily exchanged with 180° hinges
- Locking with 3 mm double mandrel bolt
- With bolted reinforcement and attachment frame of solid square tubes perforated with 4.5 mm holes every 25 mm
- Top plate can be removed; 4 transport lugs M12 per DIN 580:2003-08
- Bottom with three-part , adjustable base plate and mounting holes 10.6 mm
- Mounting plates adjustable to depth every 25 mm. Quick and easy mounting via häwa locking brackets

Technical Data

- Depth = 19.69“
- Surface finish: Stainless steel No. 1.4301
- Metal thickness door: 2 mm; 14 ga
- Metal thickness frame: 2 mm; 14 ga
- Metal thickness rear wall: 1.5 mm; 16 ga
- Approvals: cULus; GL
- Protection type: IP55

Further technical information ➜ page 56

Scope of Delivery

- Cabinet complete with hinged front door, bolted rear panel, lifting eyes, top and bottom cable entry plates and one key

Accessories

- Connecting bolts ➜ page 56
- Mounting kits for grounding straps ➜ page 57
- Joining rubber gasket ➜ page 56
- Enhancement kits IP 56 for H395/H375 ➜ page 57
- Joining brackets ➜ page 56
- Joining flange adaptor ➜ page 57
- Connector ➜ page 56
- Bases height 3.94“ ➜ page 57
- Bases height 7.87“ ➜ page 57
- Side panel for H375 ➜ page 57

Dimensions (WxHxD)		Metal thickness Mounting plate		Weight		Order No.	
mm	inch	mm	ga	kg	lbs	without mounting plate	with mounting plate
1.000 x 1.600 x 500	39,37 x 62,99 x 19,69	3	11	94	207,27	**0375-1016-50-00**	
1.000 x 1.600 x 500	39,37 x 62,99 x 19,69	3	11	129	284,44		**0375-1016-50-10**
1.000 x 1.800 x 500	39,37 x 70,87 x 19,69	3	11	101	222,7	**0375-1018-50-00**	
1.000 x 1.800 x 500	39,37 x 70,87 x 19,69	3	11	141	310,9		**0375-1018-50-10**
1.000 x 2.000 x 500	39,37 x 78,74 x 19,69	3	11	108,5	239,24	**0375-1020-50-00**	
1.000 x 2.000 x 500	39,37 x 78,74 x 19,69	3	11	153	337,36		**0375-1020-50-10**
1.200 x 1.800 x 500	47,24 x 70,87 x 19,69	3	11	120	264,6	**0375-1218-50-00** [2]	
1.200 x 1.800 x 500	47,24 x 70,87 x 19,69	3	11	168	370,44		**0375-1218-50-10** [2]
1.200 x 2.000 x 500	47,24 x 78,74 x 19,69	3	11	129,5	285,55	**0375-1220-50-00** [2]	
1.200 x 2.000 x 500	47,24 x 78,74 x 19,69	3	11	183	403,52		**0375-1220-50-10** [2]
600 x 1.800 x 500	23,62 x 70,87 x 19,69	2,5	12	72	158,76	**0375-6018-50-00**	
600 x 1.800 x 500	23,62 x 70,87 x 19,69	2,5	12	91	200,66		**0375-6018-50-10**
600 x 2.000 x 500	23,62 x 78,74 x 19,69	2,5	12	77,5	170,89	**0375-6020-50-00**	
600 x 2.000 x 500	23,62 x 78,74 x 19,69	2,5	12	99	218,3		**0375-6020-50-10**
800 x 1.800 x 500	31,5 x 70,87 x 19,69	2,5	12	86,5	190,73	**0375-8018-50-00**	
800 x 1.800 x 500	31,5 x 70,87 x 19,69	2,5	12	113	249,16		**0375-8018-50-10**
800 x 2.000 x 500	31,5 x 78,74 x 19,69	2,5	12	93,5	206,17	**0375-8020-50-00**	
800 x 2.000 x 500	31,5 x 78,74 x 19,69	2,5	12	123	271,22		**0375-8020-50-10**

[2] with two doors

Technical Information

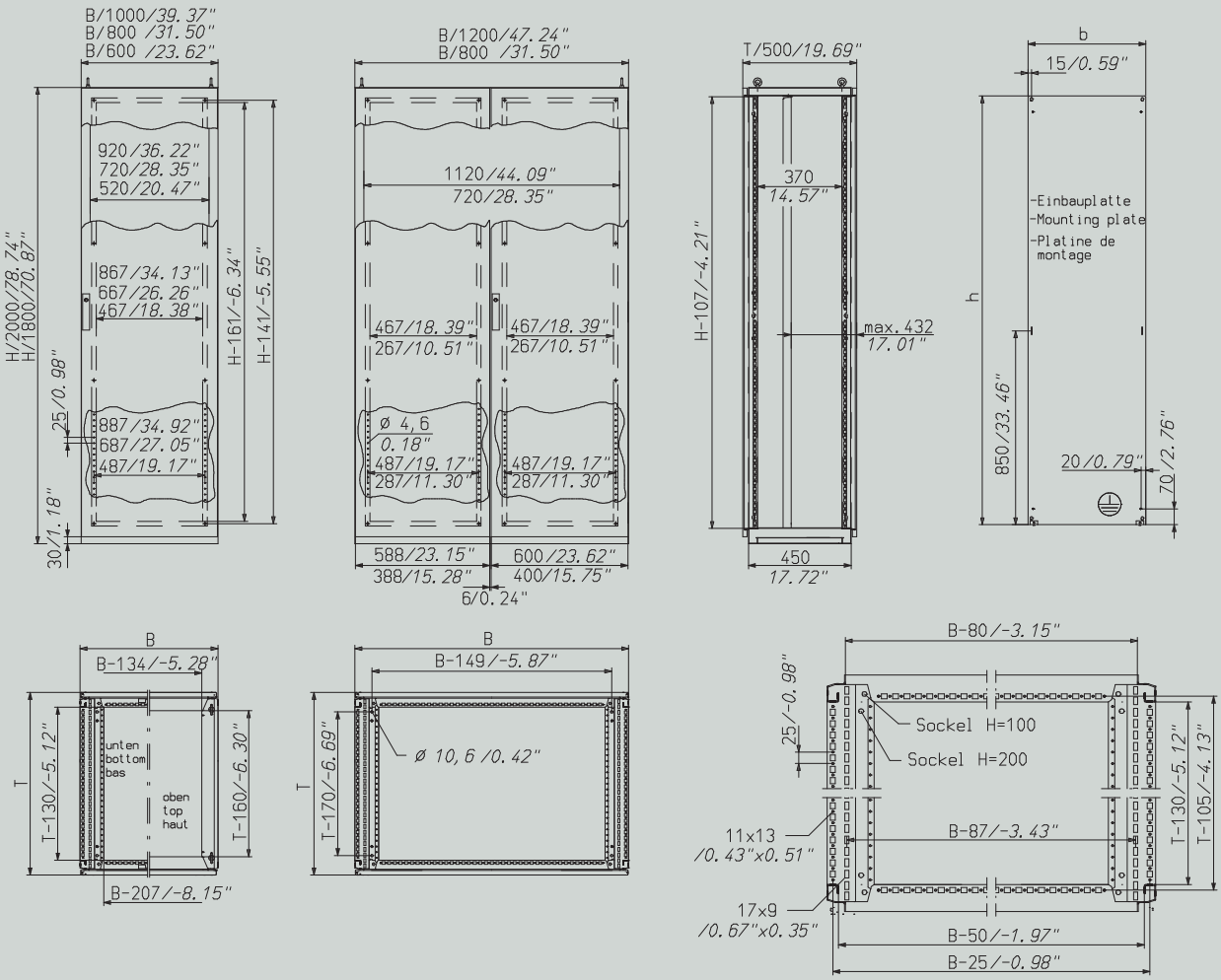

Accessories

Connector set Standard Details ➜ **page 189**

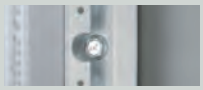

Description	Order No.
For modular installation of cabinets	**0376-7002-00-43**

Joining rubber gasket Details ➜ **page 174**

Description	Order No.
One-sided self-adhesive with oil-resistant adhesive	**3080-0102-18-00**

Connector set Details ➜ **page 189**

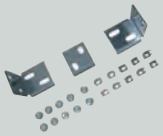

Description	Order No.
For modular installation of cabinets	**0396-7032-01-43**

Joining brackets Details ➜ **page 188**

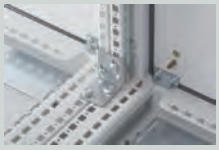

Description	Order No.
Brackets for joining adjacent modular cabinets.	**0396-0010-00-00**

häwa

Joining flange adaptor Details ➜ **page 188**

Description	Order No.
For modular cabinet assembly.	**0396-0012-00-00**

Mounting kits for grounding straps Details ➜ **page 166**

Description	Order No.
For H375/H395 cabinets **Hardware for mounting grounding straps in häwa modular cabinets**	**3080-9036-03-95**

Bases height 3.94“ Details ➜ **page 119**

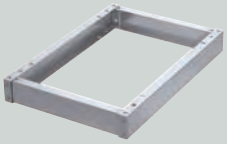

Description	Hole dimension (a)		suitable for width		suitable for depth		Dimension T		Order No.
	mm	inch	mm	inch	mm	inch	mm	inch	
For free-standing single and ganged-together modular cabinets **Rugged U-profiles** **High lifting capacity.**	305	12.01	1,000	39.37	500	19.69	350	13.78	**0376-1001-50-11**
	305	12.01	1,200	47.24	500	19.69	350	13.78	**0376-1201-50-11**
	305	12.01	600	23.62	500	19.69	350	13.78	**0376-6001-50-11**
	305	12.01	800	31.5	500	19.69	350	13.78	**0376-8001-50-11**

Bases height 7.87“ Details ➜ **page 121**

Description	suitable for width		suitable for depth		Dimension T		Order No.
	mm	inch	mm	inch	mm	inch	
Quick and easy installation **For free-standing single and ganged-together modular cabinets** **High lifting capacity**	600	23.62	500	19.69	450	17.72	**0376.6002.50.11**
	800	31.5	500	19.69	450	17.72	**0376.8002.50.11**
	1,000	39.37	500	19.69	450	17.72	**0376.1002.50.11**
	1,200	47.24	500	19.69	450	17.72	**0376.1202.50.11**

Side panel for H375 Details ➜ **page 118**

Description	suitable for height		suitable for depth		Dimension HS		Dimension TS		Order No.
	mm	inch	mm	inch	mm	inch	mm	inch	
For installation of outward side panels of modular cabinets H375	1,800	70.87	500	19.69	1,796	70.71	450	17.72	**0376-7018-50-61**
	2,000	78.74	500	19.69	1,996	78.58	450	17.72	**0376-7020-50-61**

Enhancement kits IP 56 for H395/H375 Details ➜ **page 174**

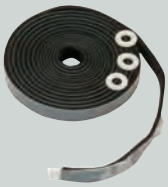

Description	Order No.
Gasket 10x2 mm, self-adhesive, and sealing washers, 11 mm diameter, for additional sealing of side panels and fittings **To increase IP rating from IP55 to IP56** **for all H395 and H375 modular cabinets**	**0396-7056-01-00**

Modular cabinets H375, D-23.62“

Features
- Strong
- Easy to work with
- Modular
- Ingenious in detail

Product Description

Free-standing cabinets with single or double door design. Available with or without mounting plate.
- Grounding studs M8x20 on all moving and removable parts, as well as top and bottom panels.
- Flanged edges form rain gutter and prevent dust and water from entering the cabinet
- Doors with foamed gaskets; can be mounted at right or left side – standard is right side.
- 120° hidden hinges, which can be easily exchanged with 180° hinges
- Locking with 3 mm double mandrel bolt
- With bolted reinforcement and attachment frame of solid square tubes perforated with 4.5 mm holes every 25 mm
- Top plate can be removed; 4 transport lugs M12 per DIN 580:2003-08
- Bottom with three-part , adjustable base plate and mounting holes 10.6 mm
- Mounting plates adjustable to depth every 25 mm. Quick and easy mounting via häwa locking brackets

Technical Data
- Surface finish: Stainless steel No. 1.4301
- Metal thickness door: 2 mm; 14 ga
- Metal thickness frame: 2 mm; 14 ga
- Metal thickness rear wall: 1.5 mm; 16 ga
- Approvals: cULus; GL
- Protection type: IP55

Further technical information ➜ page 59

Scope of Delivery
- Cabinet complete with hinged front door, bolted rear panel, lifting eyes, top and bottom cable entry plates and one key

Accessories
- Connecting bolts ➜ page 59
- Mounting kits for grounding straps ➜ page 60
- Joining rubber gasket ➜ page 59
- Enhancement kits IP 56 for H395/H375 ➜ page 61
- Joining brackets ➜ page 60
- Joining flange adaptor ➜ page 60
- Connector ➜ page 59
- Bases height 3.94“ ➜ page 60
- Side panel for H375 ➜ page 60
- Bases height 7.87“ ➜ page 60

Dimensions (WxHxD)		Metal thickness Mounting plate		Weight		**Order No.**	
mm	inch	mm	ga	kg	lbs	**without mounting plate**	**with mounting plate**
600 x 1.800 x 600	23,62 x 70,87 x 23,62	2,5	12	75	165,38	**0375-6018-60-00**	
600 x 1.800 x 600	23,62 x 70,87 x 23,62	2,5	12	94	207,27		**0375-6018-60-10**
600 x 2.000 x 600	23,62 x 78,74 x 23,62	2,5	12	79,5	175,3	**0375-6020-60-00**	
600 x 2.000 x 600	23,62 x 78,74 x 23,62	2,5	12	101	222,7		**0375-6020-60-10**
800 x 1.800 x 600	31,5 x 70,87 x 23,62	2,5	12	89,5	197,35	**0375-8018-60-00**	
800 x 1.800 x 600	31,5 x 70,87 x 23,62	2,5	12	116	255,78		**0375-8018-60-10**
800 x 2.000 x 600	31,5 x 78,74 x 23,62	2,5	12	96,5	212,78	**0375-8020-60-00**	
800 x 2.000 x 600	31,5 x 78,74 x 23,62	2,5	12	126	277,83		**0375-8020-60-10**
1.200 x 1.800 x 600	47,24 x 70,87 x 23,62	3	11	124	273,42	**0375-1218-60-00** [2]	
1.200 x 1.800 x 600	47,24 x 70,87 x 23,62	3	11	172	379,26		**0375-1218-60-10** [2]
1.200 x 2.000 x 600	47,24 x 78,74 x 23,62	3	11	133,5	294,37	**0375-1220-60-00** [2]	
1.200 x 2.000 x 600	47,24 x 78,74 x 23,62	3	11	187	412,34		**0375-1220-60-10** [2]

[2] with two doors

häwa

Technical Information

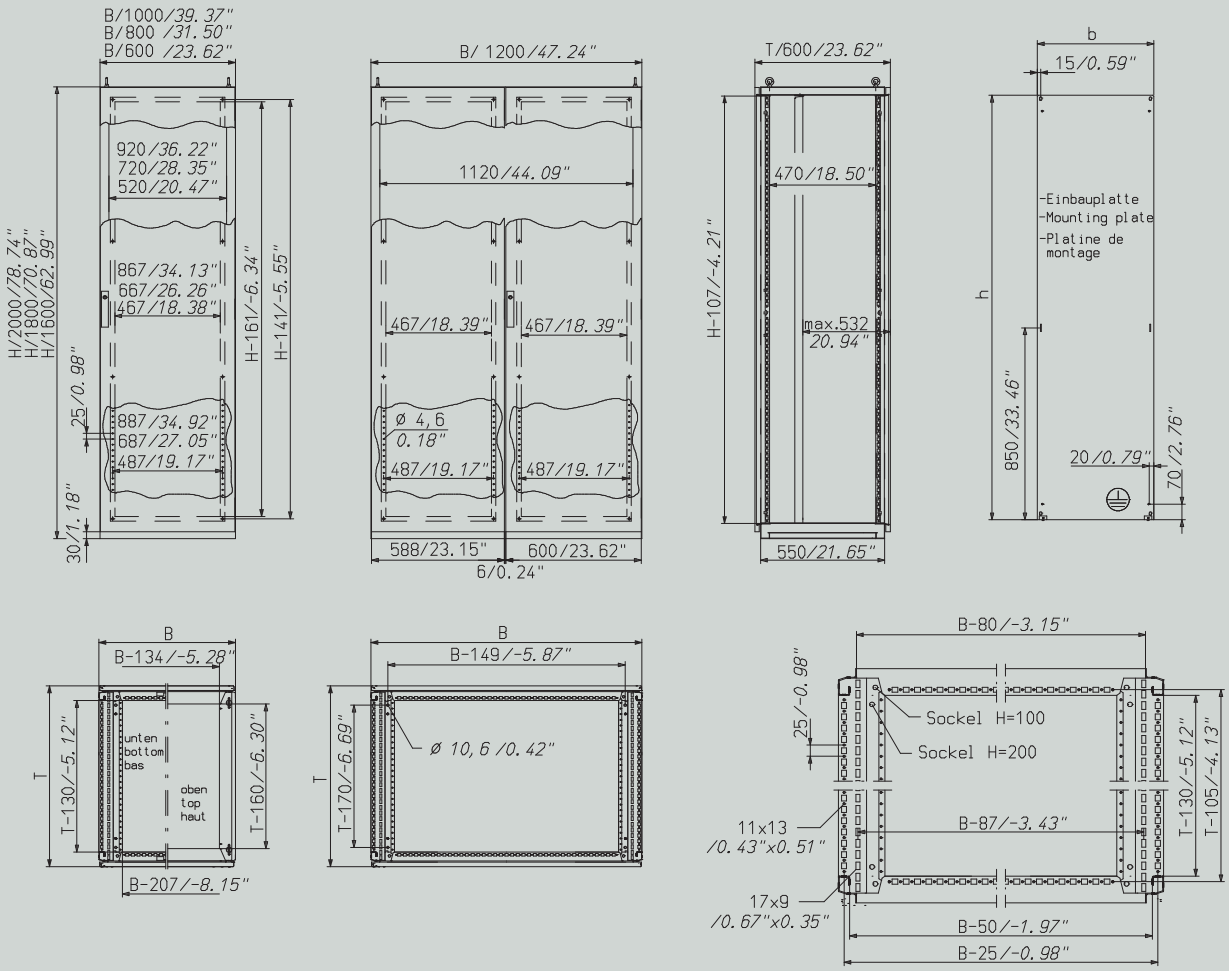

Accessories

Connector set Standard Details ➜ **page 189**

Description	Order No.
For modular installation of cabinets	**0376-7002-00-43**

Joining rubber gasket Details ➜ **page 174**

Description	Order No.
One-sided self-adhesive with oil-resistant adhesive	**3080-0102-18-00**

Stainless steel

Connector set Details ➜ **page 189**

Description	Order No.
For modular installation of cabinets	**0396-7032-01-43**

Joining brackets Details ➜ **page 188**

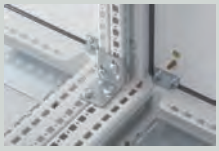

Description	Order No.
Brackets for joining adjacent modular cabinets.	**0396-0010-00-00**

Joining flange adaptor Details ➜ **page 188**

Description	Order No.
For modular cabinet assembly.	**0396-0012-00-00**

Mounting kits for grounding straps Details ➜ **page 166**

Description	Order No.
For H375/H395 cabinets **Hardware for mounting grounding straps in häwa modular cabinets**	**3080-9036-03-95**

Bases height 3.94“ Details ➜ **page 119**

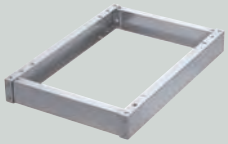

Description	Hole dimension (a)		suitable for width		suitable for depth		Dimension T		Order No.
	mm	inch	mm	inch	mm	inch	mm	inch	
For free-standing single and ganged-together modular cabinets **Rugged U-profiles** **High lifting capacity.**	505	19.88	600	23.62	600	23.62	550	21.65	**0376-6001-60-11**
	505	19.88	800	31.5	600	23.62	550	21.65	**0376-8001-60-11**
	505	19.88	1,200	47.24	600	23.62	550	21.65	**0376-1201-60-11**

Bases height 7.87“ Details ➜ **page 119**

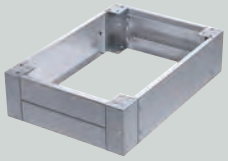

Description	suitable for width		suitable for depth		Dimension T		Order No.
	mm	inch	mm	inch	mm	inch	
Quick and easy installation **For free-standing single and ganged-together modular cabinets** **High lifting capacity**	600	23.62	600	23.62	550	21.65	**0376.6002.60.11**
	800	31.5	600	23.62	550	21.65	**0376.8002.60.11**
	1,200	47.24	600	23.62	550	21.65	**0376.1202.60.11**

Side panel for H375 Details ➜ **page 118**

Description	suitable for height		suitable for depth		Dimension HS		Dimension TS		Order No.
	mm	inch	mm	inch	mm	inch	mm	inch	
For installation of outward side panels of modular cabinets H375	1,800	70.87	600	23.62	1,796	70.71	550	21.65	**0376-7018-60-61**
	2,000	78.74	600	23.62	1,996	78.58	550	21.65	**0376-7020-60-61**

häwa

Enhancement kits IP 56 for H395/H375 Details ➜ **page 174**

	Description	Order No.
	Gasket 10x2 mm, self-adhesive, and sealing washers, 11 mm diameter, for additional sealing of side panels and fittings **To increase IP rating from IP55 to IP56** **for all H395 and H375 modular cabinets**	**0396-7056-01-00**

Sanitary IP69K Cabinet H450

The cabinet frame is enclosed with a stainless steel skin and an integrated door frame. It provides rigid torsional resistance – without joints at the rear, top and bottom.

Door tightness is assured by the outer seal profile and the special door construction, so that – in conjunction with seamless side panels and cable entry plates – cleaning can be accomplished quickly and efficiently.

Protection Class IP69/NEMA 4X

Side panels are recessed into the frame and secured from the inside resulting in a smooth exterior surface (see protection class).

The sturdy, internally mounted stainless steel hinges have an opening angle of 110°. The hinge pivot center is placed outside and away from the frame, thus enabling continuous and uniform compression of the door gasket..

Quick and easy mounting plate installation with häwa locking brackets. Strong bolted slotted rails with additional supporting surface for inclined installation. The mounting plate can be adjusted over the entire depth of the cabinet at 25mm (1") intervals.

Flange elements ensure secure and stable modular assembly.

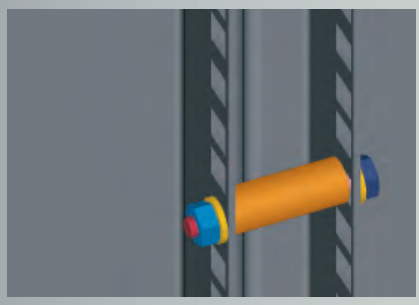

Protection class IP 66/69 is achieved for single and double door cabinets with mounted side panels via an internal seam-lessly foamed gasket and an external special seal extrusion. Through this external seal, the cabinet suited for contact with foods and can be used in other critical clean environments. The seal has excellent resistance to exposure, aging, ozone, chemicals, hot water and steam, as well as to polar liquids, like acetone, methanol, etc. Temperature range is from -50°C up to 130°C (-58°F to 266°F). After installation in suitable clean-rooms, the side panels and cable entry plates may additionally be sealed with e.g. FDA conform silicone if desired.

H450 Depth-15.75“

Features
- Protection class IP66/69
- Without joints
- No dead spots
- Suitable for critical applications

Product Description
- Cable entry: Bottom plates with 4 cable entry plates flush mounted, attachment from inside.
- Grounding: M8x20 mm/0.8“ studs in top, bottom, door and sides. Mounting plate is pre-drilled.
- Base mounting: 4 holes 12 mm/0.47“ dia.
- Hinged door: Externally mounted, at right or left side. Edges rounded, 30 mm/1.18“ radius,
- Lock: 3 mm double mandrel lock with safety latch and locking bars. Adjustable reinforcement and attachment frame, galvanized with 25 mm/0.98“ hole pattern per DIN standard.
- Modular assembly: Via flange element or quick connector attachment to perforated frame.
- Mounting plate systems and accessories: Mounting plate, bases, side panels, attachment brackets etc.

Technical Data
- Depth 15.75“

Further technical information ➜ page 65

Scope of Delivery
- Cabinet complete with hinged front door, 4 bottom cable entry plates and one key

Note
Available as option:
Design in V4A stainless 1.4571 or sheet steel.
Externally brushed, 300 grid or polished.
Doors flush
Viewing window
Swing frame type 0318 with mounting equipment
Cable entry through roof
Custom dimensions
Partition plates

Accessories
- 7.87“ high base ➜ page 65
- Side panel for H450 ➜ page 65
- Flange element ➜ page 65

Dimensions (WxHxD)		Metal thickness Mounting plate		Weight		Order No.	
mm	inch	mm	ga	kg	lbs	without mounting plate	with mounting plate
600 x 1.600 x 400	23,62 x 62,99 x 15,75	2,5	12	76	167,58	**0450-6016-40-00**	
600 x 1.600 x 400	23,62 x 62,99 x 15,75	2,5	12	92,5	203,5		**0450-6016-40-10**
600 x 1.800 x 400	23,62 x 70,87 x 15,75	2,5	12	84	185,22	**0450-6018-40-00**	
600 x 1.800 x 400	23,62 x 70,87 x 15,75	2,5	12	103	227,12		**0450-6018-40-10**
600 x 2.000 x 400	23,62 x 78,74 x 15,75	2,5	12	92,5	203,5	**0450-6020-40-00**	
600 x 2.000 x 400	23,62 x 78,74 x 15,75	2,5	12	114	251,37		**0450-6020-40-10**
800 x 1.600 x 400	31,5 x 62,99 x 15,75	2,5	12	92,5	203,96	**0450-8016-40-00**	
800 x 1.600 x 400	31,5 x 62,99 x 15,75	2,5	12	116	255,78		**0450-8016-40-10**
800 x 1.800 x 400	31,5 x 70,87 x 15,75	2,5	12	102	224,91	**0450-8018-40-00**	
800 x 1.800 x 400	31,5 x 70,87 x 15,75	2,5	12	128,5	283,34		**0450-8018-40-10**
800 x 2.000 x 400	31,5 x 78,74 x 15,75	2,5	12	112	246,96	**0450-8020-40-00**	
800 x 2.000 x 400	31,5 x 78,74 x 15,75	2,5	12	141,5	312,01		**0450-8020-40-10**
1.000 x 1.600 x 400	39,37 x 62,99 x 15,75	3	11	109,5	241,45	**0450-1016-40-00**	
1.000 x 1.600 x 400	39,37 x 62,99 x 15,75	3	11	144,5	318,62		**0450-1016-40-10**
1.000 x 1.800 x 400	39,37 x 70,87 x 15,75	3	11	125	275,62	**0450-1116-40-00**	
1.000 x 1.800 x 400	39,37 x 70,87 x 15,75	3	11	160	352,8		**0450-1116-40-10**
1.000 x 2.000 x 400	39,37 x 78,74 x 15,75	3	11	131,5	289,96	**0450-1020-40-00**	
1.000 x 2.000 x 400	39,37 x 78,74 x 15,75	3	11	176	388,08		**0450-1020-40-10**
1.200 x 1.600 x 400	47,24 x 62,99 x 15,75	3	11	125	275,62	**0450-1216-40-00**	
1.200 x 1.600 x 400	47,24 x 62,99 x 15,75	3	11	167,5	369,34		**0450-1216-40-10**
1.200 x 1.800 x 400	47,24 x 70,87 x 15,75	3	11	138	304,29	**0450-1218-40-00**	
1.200 x 1.800 x 400	47,24 x 70,87 x 15,75	3	11	186	410,13		**0450-1218-40-10**
1.200 x 2.000 x 400	47,24 x 78,74 x 15,75	3	11	151	332,96	**0450-1220-40-00**	
1.200 x 2.000 x 400	47,24 x 78,74 x 15,75	3	11	204,5	450,92		**0450-1220-40-10**

häwa

Technical Information

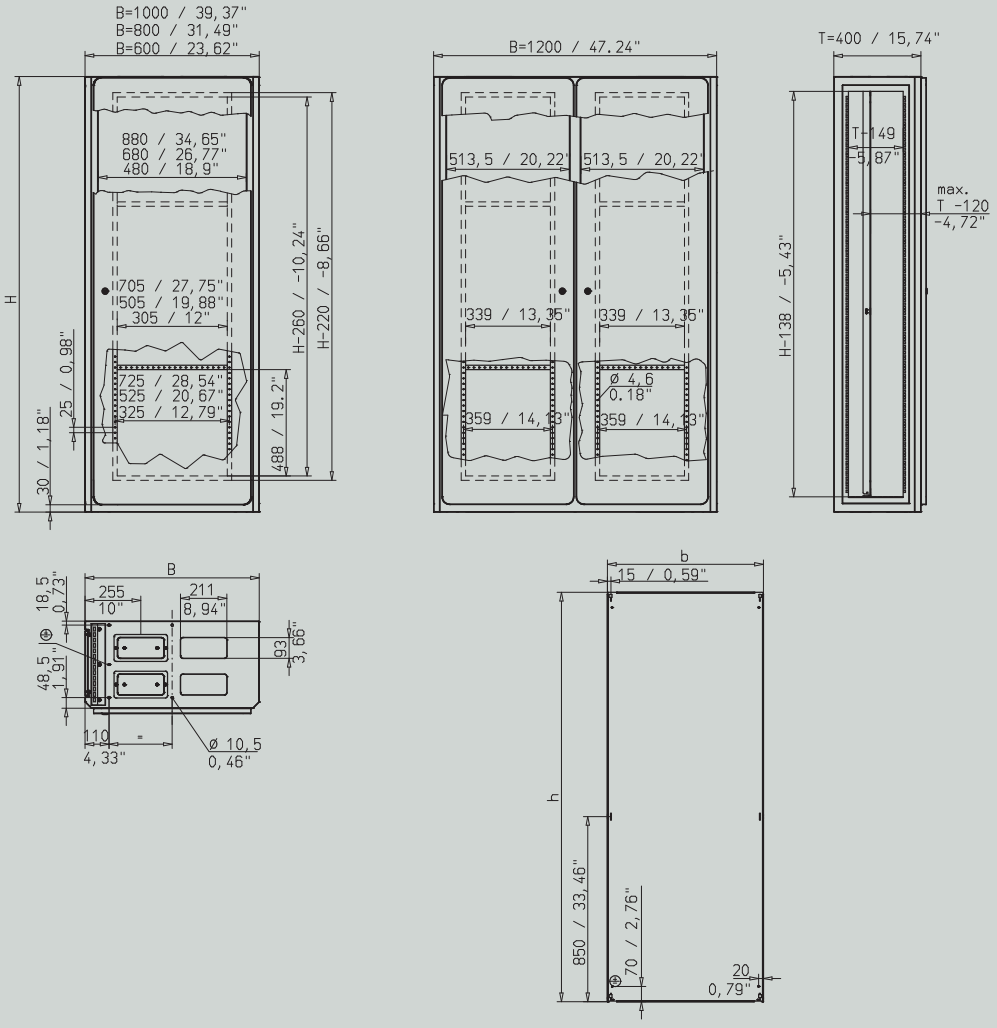

Accessories

7.87“ high base Details ➜ **page 196**

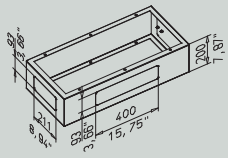

Description	suitable for width		suitable for depth		Order No.
	mm	inch	mm	inch	
Sides and fronts with cable entry plates, secured from inside. For modular assembly.	600	23.62	400	15.75	**0456-6002-40-11**
	800	31.5	400	15.75	**0456-8002-40-11**
	1,000	39.37	400	15.75	**0456-1002-40-11**
	1,200	47.24	400	15.75	**0456-1202-40-11**

Side panel for H450 Details ➜ **page 196**

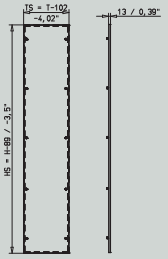

Description	Dimensions		suitable for height		suitable for depth		Order No.
	mm	inch	mm	inch	mm	inch	
For installation of outward side panel of H450 cabinets	1,511 x 298	59.49 x 11.73	1,600	62.99	400	15.75	**0456-7016-40-61**
	1,711 x 298	67.36 x 11.73	1,800	70.87	400	15.75	**0456-7018-40-61**
	1,911 x 298	75.24 x 11.73	2,000	78.74	400	15.75	**0456-7020-40-61**

Flange element Details ➜ **page 197**

Description	Order No.
For securing cabinet frames. Assures secure and stable connection.	**0346-7032-01-43**

H450 Depth 19.69“

Product Description

- Cable entry: Bottom plates with 4 cable entry plates flush mounted, attachment from inside.
- Grounding: M8x20 mm/0.8“ studs in top, bottom, door and sides. Mounting plate is pre-drilled.
- Base mounting: 4 holes 12 mm/0.47“ dia.
- Hinged door: Externally mounted, at right or left side. Edges rounded, 30 mm/1.18“ radius,
- Lock: 3 mm double mandrel lock with safety latch and locking bars. Adjustable reinforcement and attachment frame, galvanized with 25 mm/0.98“ hole pattern per DIN standard.
- Modular assembly: Via flange element or quick connector attachment to perforated frame.
- Mounting plate systems and accessories: Mounting plate, bases, side panels, attachment brackets etc.

Technical Data

- Depth = 19.69“

Further technical information ➜ page 67

Scope of Delivery

- Cabinet complete with hinged front door, 4 bottom cable entry plates and one key

Note

Available as option:

Design in V4A stainless 1.4571 or sheet steel.
Externally brushed, 300 grid or polished.
Doors flush
Viewing window
Swing frame type 0318 with mounting equipment
Cable entry through roof
Custom dimensions
Partition plates

Accessories

- Side panel for H450 ➜ page 67
- 7.87“ high base ➜ page 67
- Flange element ➜ page 67

Dimensions (WxHxD)		Metal thickness Mounting plate		Weight		Order No.	
						without mounting plate	**with mounting plate**
mm	inch	mm	ga	kg	lbs		
600 x 1.600 x 500	23,62 x 62,99 x 19,69	2,5	12	85	187,42	**0450-6016-50-00**	
600 x 1.600 x 500	23,62 x 62,99 x 19,69	2,5	12	101,5	223,81		**0450-6016-50-10**
600 x 1.800 x 500	23,62 x 70,87 x 19,69	2,5	12	94	207,27	**0450-6018-50-00**	
600 x 1.800 x 500	23,62 x 70,87 x 19,69	2,5	12	113	248,6		**0450-6018-50-10**
800 x 1.600 x 500	31,5 x 62,99 x 19,69	2,5	12	102	224,91	**0450-8016-50-00**	
800 x 1.600 x 500	31,5 x 62,99 x 19,69	2,5	12	125,5	276,73		**0450-8016-50-10**
800 x 1.800 x 500	31,5 x 70,87 x 19,69	2,5	12	112,5	248,06	**0450-8018-50-00**	
800 x 1.800 x 500	31,5 x 70,87 x 19,69	2,5	12	112,5	248,06		**0450-8018-50-10**
1.000 x 1.600 x 500	39,37 x 62,99 x 19,69	3	11	120	264,6	**0450-1016-50-00**	
1.000 x 1.600 x 500	39,37 x 62,99 x 19,69	3	11	155	341,78		**0450-1016-50-10**
1.000 x 1.800 x 500	39,37 x 70,87 x 19,69	3	11	131	288,86	**0450-1018-50-00**	
1.000 x 1.800 x 500	39,37 x 70,87 x 19,69	3	11	171	377,06		**0450-1018-50-10**
1.200 x 1.600 x 500	47,24 x 62,99 x 19,69	3	11	136	299,88	**0450-1216-50-00**	
1.200 x 1.600 x 500	47,24 x 62,99 x 19,69	3	11	136	299,88		**0450-1216-50-10**
1.200 x 1.800 x 500	47,24 x 70,87 x 19,69	3	11	150	330,75	**0450-1218-50-00**	
1.200 x 1.800 x 500	47,24 x 70,87 x 19,69	3	11	198	436,59		**0450-1218-50-10**

häwa

Technical Information

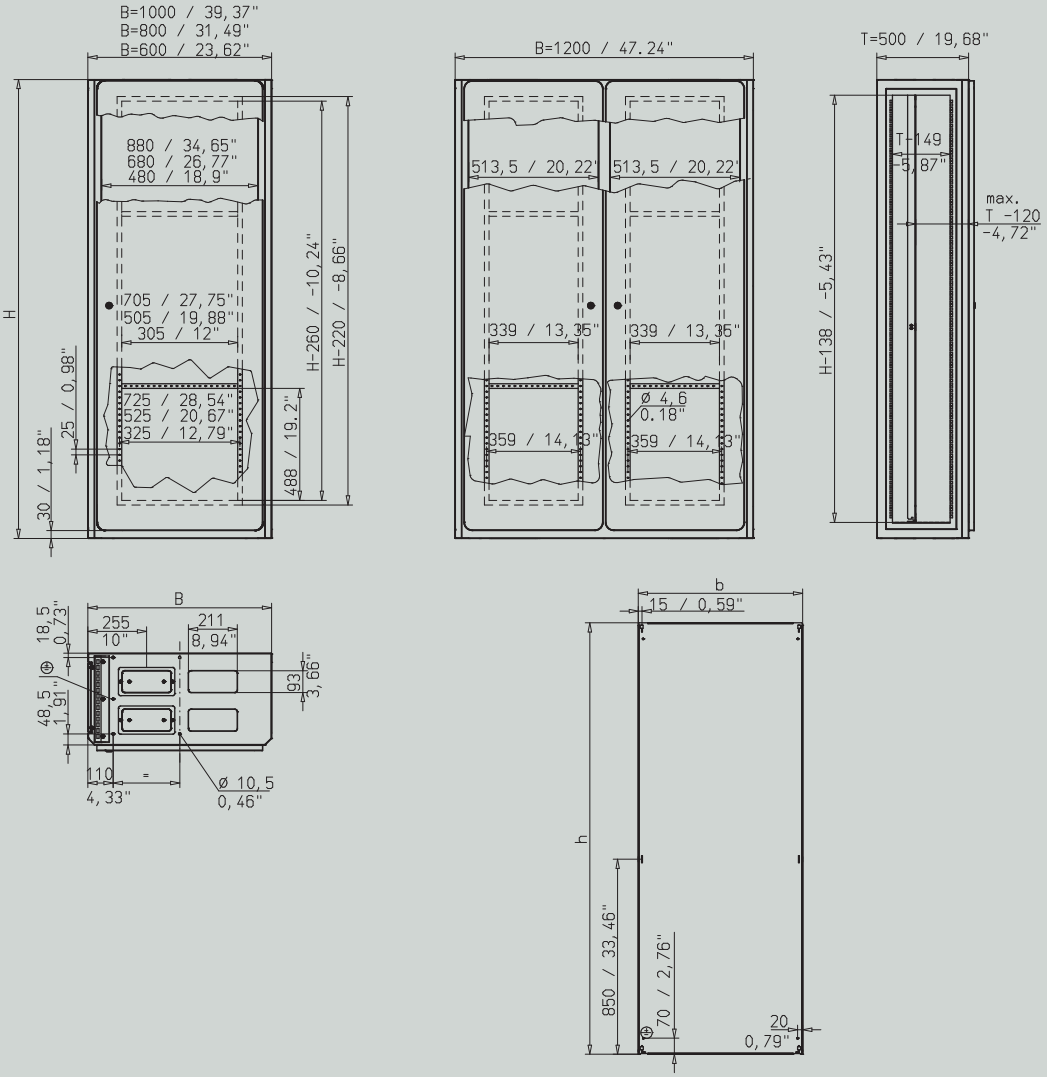

Accessories

7.87“ high base Details ➜ **page 196**

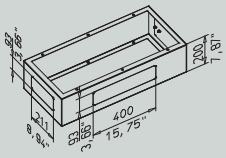

Description	suitable for width mm	suitable for width inch	suitable for depth mm	suitable for depth inch	Order No.
Sides and fronts with cable entry plates, secured from inside. For modular assembly.	600	23.62	500	19.69	**0456-6002-50-11**
	800	31.5	500	19.69	**0456-8002-50-11**
	1,000	39.37	500	19.69	**0456-1002-50-11**
	1,200	47.24	500	19.69	**0456-1202-50-11**

Side panel for H450 Details ➜ **page 196**

Description	Dimensions mm	Dimensions inch	suitable for height mm	suitable for height inch	suitable for depth mm	suitable for depth inch	Order No.
For installation of outward side panel of H450 cabinets	1,511 x 398	59.49 x 15.67	1,600	62.99	500	19.69	**0456-7016-50-61**
	1,711 x 398	67.36 x 15.67	1,800	70.87	500	19.69	**0456-7018-50-61**

Flange element Details ➜ **page 197**

Description	Order No.
For securing cabinet frames. Assures secure and stable connection.	**0346-7032-01-43**

H450 Depth 23.62“

Features
- Protection class IP66/69
- Without joints
- No dead spots
- Suitable for critical applications

Product Description
- Cable entry: Bottom plates with 4 cable entry plates flush mounted, attachment from inside.
- Grounding: M8x20 mm/0.8“ studs in top, bottom, door and sides. Mounting plate is pre-drilled.
- Base mounting: 4 holes 12 mm/0.47“ dia.
- Hinged door: Externally mounted, at right or left side. Edges rounded, 30 mm/1.18“ radius,
- Lock: 3 mm double mandrel lock with safety latch and locking bars. Adjustable reinforcement and attachment frame, galvanized with 25 mm/0.98“ hole pattern per DIN standard.
- Modular assembly: Via flange element or quick connector attachment to perforated frame.
- Mounting plate systems and accessories: Mounting plate, bases, side panels, attachment brackets etc.

Technical Data
- Depth = 23.62“

Further technical information ➜ page 69

Scope of Delivery
- Cabinet complete with hinged front door, 4 bottom cable entry plates and one key

Note
Available as option:
Design in V4A stainless 1.4571 or sheet steel.
Externally brushed, 300 grid or polished.
Doors flush
Viewing window
Swing frame type 0318 with mounting equipment
Cable entry through roof
Custom dimensions
Partition plates

Accessories
- Side panel for H450 ➜ page 69
- 7.87“ high base ➜ page 69
- Flange element ➜ page 69

Dimensions (WxHxD)		Metal thickness Mounting plate		Weight		**Order No.**	
mm	inch	mm	ga	kg	lbs	**without mounting plate**	**with mounting plate**
600 x 1.600 x 600	23,62 x 62,99 x 23,62	2,5	12	94	207,27	**0450-6016-60-00**	
600 x 1.600 x 600	23,62 x 62,99 x 23,62	2,5	12	110,5	243,65		**0450-6016-60-10**
800 x 1.600 x 600	31,5 x 62,99 x 23,62	2,5	12	111,5	245,86	**0450-8016-60-00**	
800 x 1.600 x 600	31,5 x 62,99 x 23,62	2,5	12	135	297,68		**0450-8016-60-10**
1.000 x 1.600 x 600	39,37 x 62,99 x 23,62	3	11	130,5	287,75	**0450-1016-60-00**	
1.000 x 1.600 x 600	39,37 x 62,99 x 23,62	3	11	165,5	364,93		**0450-1016-60-10**
1.200 x 1.600 x 600	47,24 x 62,99 x 23,62	3	11	147	324,14	**0450-1216-60-00**	
1.200 x 1.600 x 600	47,24 x 62,99 x 23,62	3	11	189,5	417,85		**0450-1216-60-10**

häwa

Technical Information

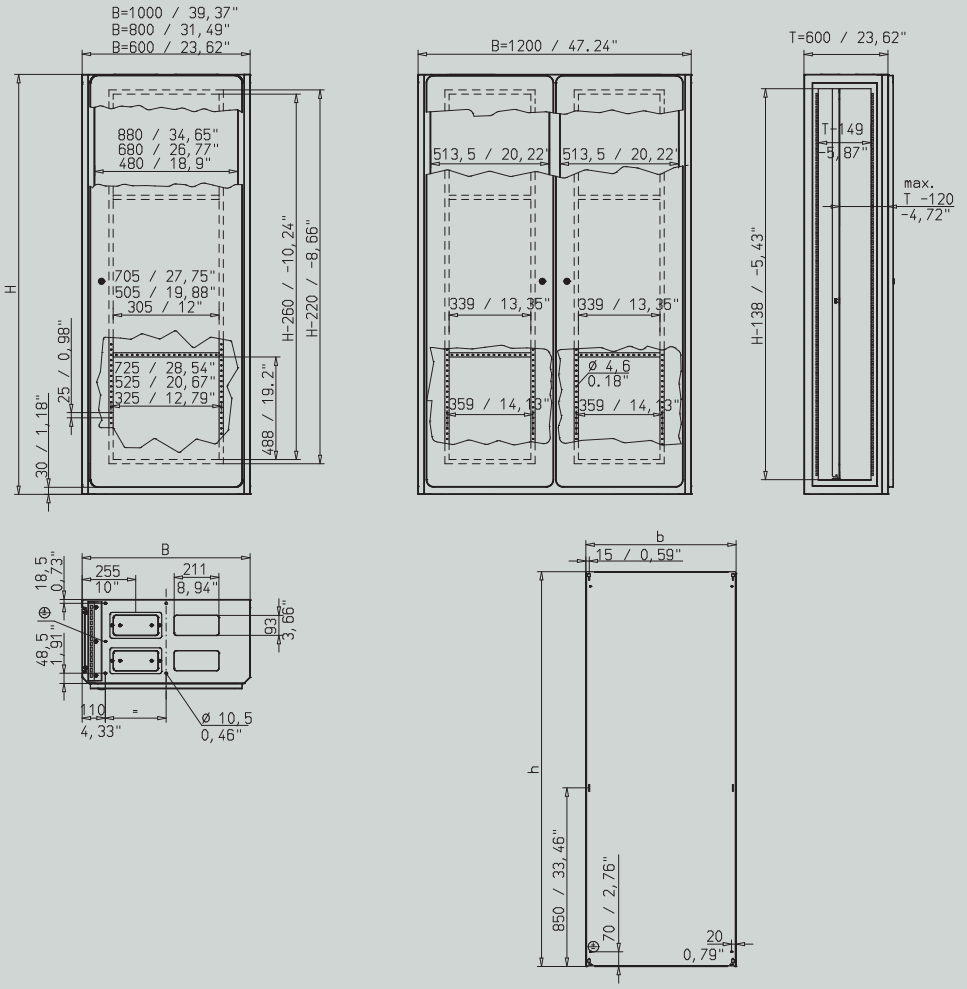

Accessories

7.87“ high base Details ➜ **page 196**

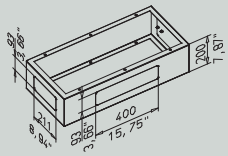

Description	suitable for width		suitable for depth		Order No.
	mm	inch	mm	inch	
Sides and fronts with cable entry plates, secured from inside. For modular assembly.	600	23.62	600	23.62	**0456-6002-60-11**
	800	31.5	600	23.62	**0456-8002-60-11**
	1,000	39.37	600	23.62	**0456-1002-60-11**
	1,200	47.24	600	23.62	**0456-1202-60-11**

Side panel for H450 Details ➜ **page 196**

Description	Dimensions		suitable for height		suitable for depth		Order No.
	mm	inch	mm	inch	mm	inch	
For installation of outward side panel of H450 cabinets	1,911 x 398	75.24 x 15.67	2,000	78.74	600	23.62	**0456-7016-60-61**

Flange element Details ➜ **page 197**

Description	Order No.
For securing cabinet frames. Assures secure and stable connection.	**0346-7032-01-43**

PC-Cabinet

Versatility and Design
The PC-cabinet type 2096 is another example of häwa's proven design capabilities.
The slim appearance combined with high functionality is perfect for many applications in the public and industrial sector.
Available in mild steel powder-coated or stainless steel.

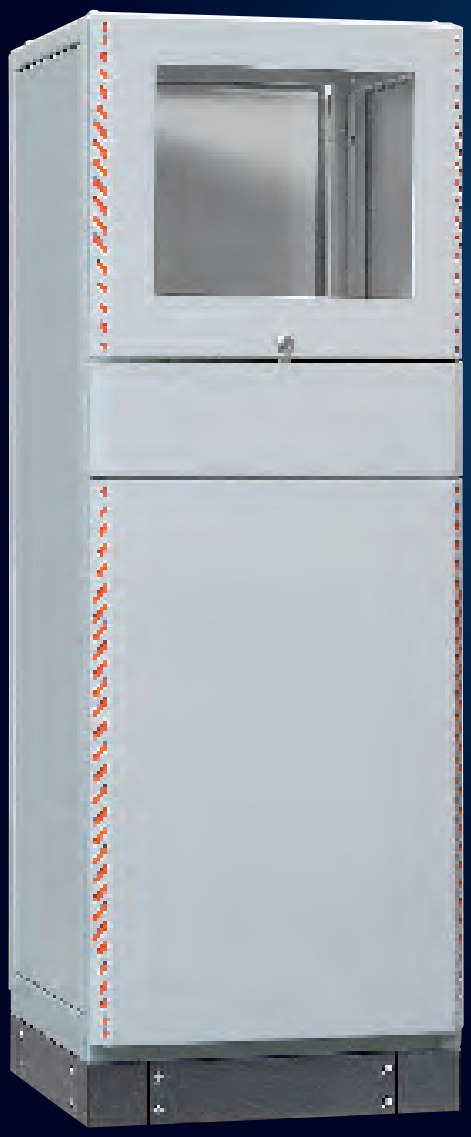

Accessibility:
Side panels and top secured from the inside

Central lock for complete front;
back door lockable

Ergonomics:
Window for monitors up to 21”
Keyboard drawer features wooden hand rest device
Usable height in lower part: 18 HU

Safety:
Protection class IP 55 (NEMA 12) – is also achieved with open drawer

Easy to install:
Unlocking of front door behind keyboard drawer
Cable entry with cable bearer to keyboard via removable cover in the back
Terminal block as transfer point

PC-Cabinet 2096

Features

- Free-standing
- User-friendly characteristics
- Customizable through a variety of options

Product Description

PC-cabinet, completely lockable. With window for monitors up to 21" . With wooden palm rest.

Technical Data

- Grounding per DIN EN 60439-1, grounding studs M8x20 / M6x16 on all moving and removable parts, as well as top and bottom panels.
- Vertical rails with 25 mm hole pattern
- Internal side panels and detachable top, mounted from inside
- Central disconnect system of the whole front side
- Viewing door with PC-Lexan window, screen size 410 x 351 mm
- Lower door
- Keyboard drawer, lockable; max. dimensions of keyboard L=500 x B=195 x H=55 mm; also with storage box
- Keyboard drawer cover at rear, with cable entry and cable support
- Standard protection class IP55, corresponds to NEMA 12
- Rear door with bar lock and 3 mm double mandrel bolt

Note

1800 mm high cabinet offers additional 6 HU beneath monitor.

Dimensions (WxHxD)		Weight		**Order No.**
mm	inch	kg	lbs	
600 x 1,600 x 600	23.62 x 62.99 x 23.62	115	253.58	**2096-6016-60-07**
600 x 1,800 x 625	23.62 x 70.87 x 24.61	123	271.22	**2096-6018-60-07**

Technical Information

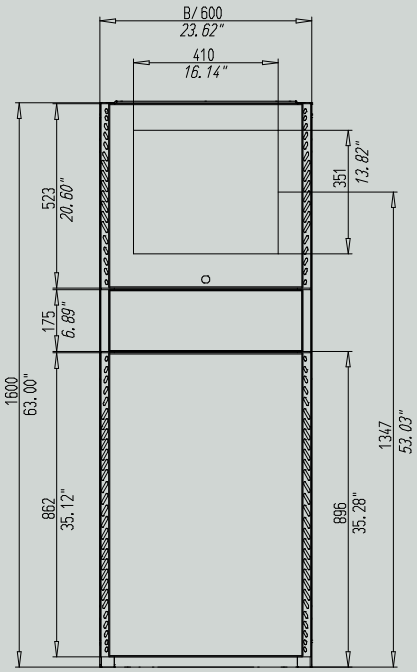

Front view

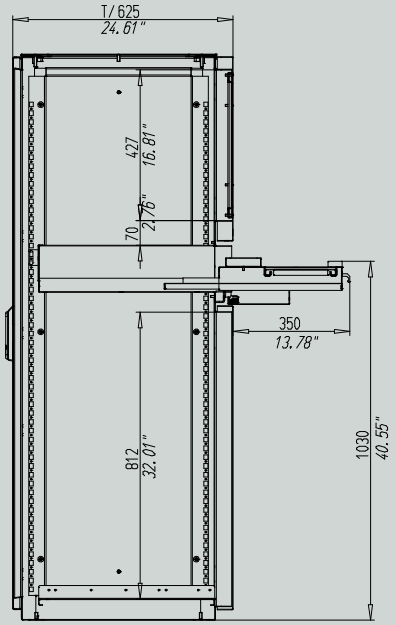

Side view

PC-Cabinet 2096, H-62.99"

PC-Cabinet

häwa

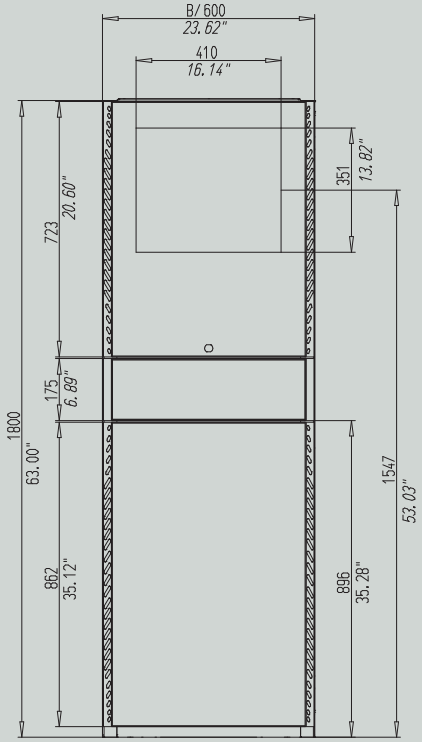

Front view

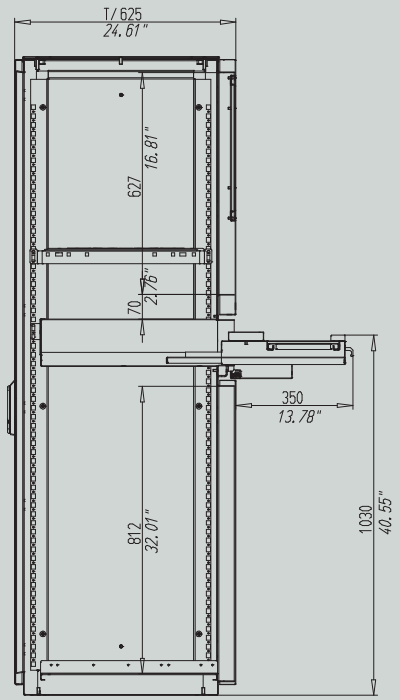

Side view

PC-Cabinet 2096, H-1800 mm

Accessories

Base for PC-Cabinet 2096 Details ➜ **page 198**

	Description	Dimensions		suitable for width		suitable for depth		Order No.
		mm	inch	mm	inch	mm	inch	
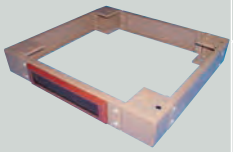	**All panels are detachable, one panel with cable entry and brush-strip.**	600 x 100 x 550	23.62 x 3.94 x 21.65	600	23.62	625	24.61	**0396.6001.60.27**

Base Details ➜ **page 198**

	Dimensions		suitable for width		suitable for depth		Order No.
	mm	inch	mm	inch	mm	inch	
	600 x 100 x 550	23.62 x 3.94 x 21.65	600	23.62	625	24.61	**0396-6001-60-17**

Top panel with rubber clamping Details ➜ **page 115**

	Description	Order No.
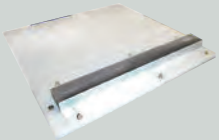	**Can be substituted for top plate or top cable entry plate. For easier cable entry into the cabinet.** **Suitable for H390/H395/PC-cabinet 2096: W x D: 600 x 600 mm**	**0396-7060-62-77**

PC-Cabinet

Top panels with brushes Details ➜ **page 116**

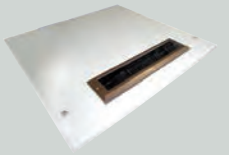

Description	Order No.
The strip allows easy cable entry in cabinet and keeps dust out. Suitable for H390/H395/PC-cabinet 2096: W x D: 600 x 600 mm	**0396-7060-62-47**

Spacer bolts for top panels Details ➜ **page 182**

Description	Order No.
They are used if the top cable entry plate is raised for roof ventilation	**0396-7018-02-00**

Extendable shelf Details ➜ **page 199**

Description	Usable surface area		suitable for width		suitable for depth		Order No.
	mm	inch	mm	inch	mm	inch	
For mounting to cabinet posts. Slots in the shelves aid air movement and help to prevent heat build up	488 x 500	19.21 x 19.69	600	23.62	625	24.61	**0396-4566-55-17**

Extendable shelf for heavy loads Details ➜ **page 200**

Description	suitable for width		suitable for depth		Order No.
	mm	inch	mm	inch	
For mounting to cabinet posts. Slots in the shelves aid air movement and help to prevent heat build up	600	23.62	625	24.61	**0396-6866-55-17**

19"-Intermediate shelves - fixed Details ➜ **page 199**

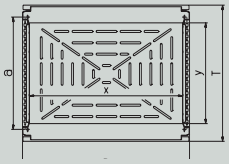

Description	Hole dimension (a)		Useable surface area		suitable for depth		Order No.
	mm	inch	mm	inch	mm	inch	
Assembled with clip nuts and bolts.	386	15.2	462 x 444	18.19 x 17.48	600	23.62	**2010-7263-44-17**

Intermediate shelves Details ➜ **page 199**

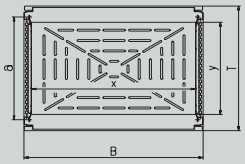

Description	Hole dimension (a)		Useable surface area		suitable for width		suitable for depth		Order No.
	mm	inch	mm	inch	mm	inch	mm	inch	
Intermediate shelves for mounting to cabinet frame	495	19.49	533 x 444	20.98 x 17.48	600	23.62	600	23.62	**2010-7266-44-17**

häwa

Extendable equipment drawer, two tiers Details ➜ **page 200**

Description	Useable surface area		suitable for width		suitable for depth		Order No.
	mm	inch	mm	inch	mm	inch	
Optimal utilization of the height in PC cabinet 2096	488.5 x 500	19.23 x 19.69	600	23.62	625	24.61	**0396-6866-55-27**

19“-Galvanized notched support rails, 18U Details ➜ **page 200**

Description	HE/U	Order No.
The Rails are resettable and can be permanently mounted to dimension „A“ of the slide rails. Mounted to the lower part of the PC cabinet 2096	HE/U 18	**0396-7900-18-73**

Center attachment Details ➜ **page 140**

Hole dimension (a)		length		suitable for depth		Order No.
mm	inch	mm	inch	mm	inch	
295	11.61	342	13.46	400	15.75	**0396-0003-40-05**
395	15.55	442	17.4	500	19.69	**0396-0003-50-05**
495	19.49	542	21.34	600	23.62	**0396-0003-60-05**
695	27.36	742	29.21	800	31.5	**0396-0003-80-05**

Slide rails for 19“ Details ➜ **page 201**

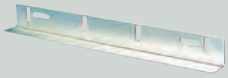

Hole dimension (a)		length		Order No.
mm	inch	mm	inch	
186	7.32	235	9.25	**2070-7046-01-86**
286	11.26	335	13.19	**2070-7046-02-86**
386	15.2			**2070-7046-03-86**
486	19.13	535	21.06	**2070-7046-04-86**

Roof mounted ventilator complete Details ➜ **page 202**

Description	Order No.
For removal of heat through top of cabinet Use for radial fan guarantees extremely high air flow Air exhausts to all 4 sides	**3148-0300-02-27**

PC-Cabinet

Fan rack with fans Details ➜ **page 203**

Description	Dimensions		suitable for depth		Order No.
	mm	inch	mm	inch	
ready for connection For side mounting in PC-Cabinets type 2096	519 x 145 x 25	20.43 x 5.71 x 0.98	625	24.61	**3114-9119-60-37**

Pre-wired fan rack Details ➜ **page 203**

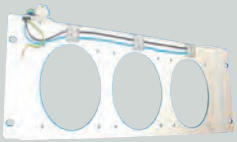

Description	Dimensions		suitable for depth		Order No.
	mm	inch	mm	inch	
ready for connection For side mounting in PC-Cabinets type 2096	519 x 145 x 20	20.43 x 5.71 x 0.79	625	24.61	**3114-9119-60-07**

Fan Details ➜ **page 204**

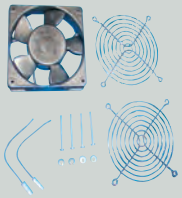

Description	Order No.
suitable for fan rack, with two protection screens	**3114-9119-25-23**

Power cable Details ➜ **page 204**

Description	Order No.
for fan rack	**3140-0000-02-00**

Connection terminal strip Details ➜ **page 205**

Description	Order No.
for PC-Cabinet type 2096 for power input, consisting for rail 1.4“-0.30“ and terminal. For mounting to cabinet base	**3093-0000-03-00**

Grounding cable set Details ➜ **page 205**

	Order No.
	3080-9036-20-96

Cable entry plate with brushes Details ➜ **page 187**

Description	Order No.
for subsequent mounting on PC-cabinet base	**0396-7310-84-00**

häwa

Hex nut Verbus-Tenislock Details ➜ **page 182**

		Order No.
	M 6 x 12	**0348-7500-06-12**
	M 8 x 16	**3003-9500-08-16**

Replacement keys for Lock type 1333 Details ➜ **page 207**

Description	Order No.
for barrel locks PC-cabinet	**3070-0130-00-00**

Frontal trim Details ➜ **page 207**

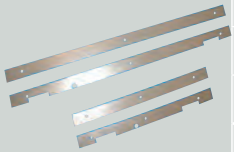

RAL	Order No.
7030 stone grey	**2096-0001-70-30**
5015 sky blue	**2096-0001-50-15**
3020 traffic red	**2096-0001-30-20**
7022 umbra grey	**2096-0001-70-22**
7030 stone grey	**2096-0002-70-30**
5015 sky blue	**2096-0002-50-15**
3020 traffic red	**2096-0002-30-20**
7022 umbra grey	**2096-0002-70-22**

Consoles

Sturdy design and broad applications

Ergonomically designed consoles ensure optimum viewing and convenient operation of built-in elements like touch-screens and pushbuttons.
Versatile designs out of mild steel or stainless steel open up vast applications.

- Large usable surfaces
- Accessibility from front and back
- Usable depths in stand: up to 467 mm (18.4”)
- Large cable entry plates and optional possibility to use second mounting plate
- Allows for vast customization

Consoles that fit your machine perfectly!

häwa is a leading manufacturer of custom consoles – designed to fit seamlessly in the applications of our customers. 19” and PC applications as well as complete custom developments – consoles are designed to ideally position operating controls for the user.
Customers appreciate häwa‘s ergonomically designed consoles that allow for convenient operation.

Technical Parameters

SNP consoles
- Protection class: construction based on IP55
- Ground studs on console, doors and mounting plate per DIN EN 60439-1
- Doors and console top with seamless foamed-in gasket. Door opening angle 180°, mounting on right or left side
- Door with perforated reinforcement frame
- Standard delivery includes doors hinged on right side
- Latch lock is 0.12” double mandrel bolt. Can be exchanged with various internationally known lock types
- Console top with opening struts on right side – on both sides from W= 800 mm (32”)
- Bottom adjustable base plate, prepared for rubber clamps.
- Galvanized mounting plate; can be installed in two different height positions
- Surface:
  Mild steel with improved pretreatment through iron phosphate solution and passivation free from chromium, and with Epoxy-Polyester powder coating, textured. Salt spray test per DIN 50021 for 500 hours Approved for outside applications – depending on requirements of application. Direct sun light should be avoided.:
- Stainless steel 1.4301 (304), externally brushed

H123 consoles

- Protection class: construction based on IP55
- Ground studs on console, doors and mounting plate per DIN EN 60439-1
- Bolted doors and console top with seamless foamed-in gasket
- Latch lock is 0.12” double mandrel bolt. Can be exchanged with various internationally know lock types
- Console top with opening struts on right side – on both sides from W= 1000 mm (40”)
- Bottom adjustable base plate
- Galvanized mounting plate; adjustable depth Optional: second mounting plate
- Surface:
  Mild steel with improved pretreatment through iron phosphate solution and passivation free from chromium, and with Epoxy-Polyester powder coating, textured.
  Salt spray test per DIN 50021 for 500 hours Approved for outside applications –
  depending on requirements of application.
  Direct sun light should be avoided.:
- Stainless steel 1.4301 (304), externally brushed

H122 consoles

- Protection class: construction based on IP55
- Ground studs on console, doors and mounting plate per DIN EN 60439-1
- Bolted doors and console top with seamless foamed-in gasket
- Latch lock is 0.12” double mandrel bolt. Can be ex changed with various internationally know lock types
- Console top with opening struts on right side – on both sides from W= 1000 mm (40”)
- Bottom adjustable base plate
- Galvanized mounting plate; adjustable depth. From depth 650 mm (18”) with two mounting plates.
- Surface:
  Mild steel with improved pretreatment through iron phosphate solution and passivation free from chromium, and with Epoxy-Polyester powder coating, textured.
  Salt spray test per DIN 50021 for 500 hours Approved for outside applications –
  depending on requirements of application.
  Direct sun light should be avoided.:
- Stainless steel 1.4301 (304), externally brushed

H335 Consoles

Features

- Consoles with or without mounting plate
- Ergonomically designed console assures optimum viewing and operation of control devices

Product Description

- Ground connection: On console, doors and mounting plate
- Console top; Opening struts on right side (if W=31.50“ on both sides)
- Front door: Opening angle 180°, mounting on right or left side
- Seal: Foamed seal corresponding to protection class IP 559 to EN 60529, Nema 12
- Rear panel: closed
- Lock: Latch lock double mandrel 3 mm
- Cable entry plate: Secured from inside
- Mounting plate: Galvanized sheet steel, can be installed in two different heigth positions
- Excellent surface finish protection with improved pretreatment of the sheet metals by iron phosphatization and chrome-free repassivation as well as pollution free powder coating

Technical Data

- Deph: 492 mm in bottom sections, in top section it can be up to 650.
- Grounding per DIN EN 60439-1,
- Material: Sheet steel
- Surface finish: Powder coated RAL 7035
- Metal thickness frame: 1.5 mm; 16 ga
- Metal thickness Mounting plate: 2.5 mm; 12 ga
- Material thickness Consoles top: 2 mm; 14 ga
- Protection class: construction based on IP55

Scope of Delivery

- Console complete with cable entry plate

Accessories

- Bases 0346, heigt 3.94“ ➜ page 81
- Bases 0346, heigt 7.87“ ➜ page 81

Dimensions (WxHxD)		Weight		Order No.
mm	inch	kg	lbs	
500 x 977 x 492	19.69 x 38.46 x 19.37			**0335-5010-49-07**
500 x 977 x 492	19.69 x 38.46 x 19.37	40	88.2	**0335-5010-49-17**
600 x 977 x 492	23.62 x 38.46 x 19.37			**0335-6010-49-07**
600 x 977 x 492	23.62 x 38.46 x 19.37	46	101.43	**0335-6010-49-17**
800 x 977 x 492	31.5 x 38.46 x 19.37			**0335-8010-49-07**
800 x 977 x 492	31.5 x 38.46 x 19.37	60	132.3	**0335-8010-49-17**
1,000 x 977 x 492	39.37 x 38.46 x 19.37			**0335-1010-49-07**
1,000 x 977 x 492	39.37 x 38.46 x 19.37	69	152.14	**0335-1010-49-17** [2)]

[2)] with two doors

Technical Information

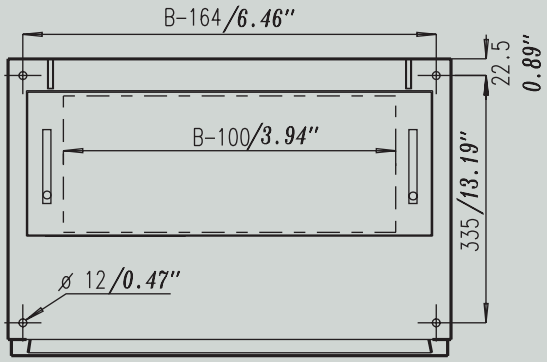

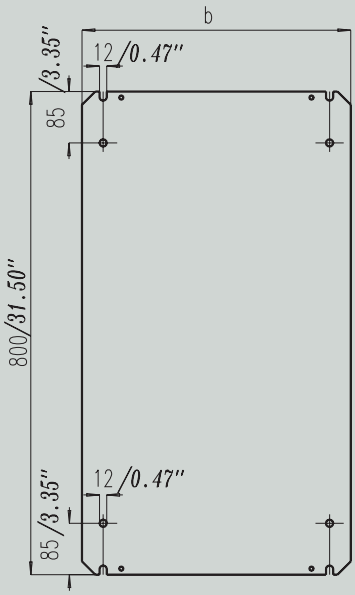

Mounting plate

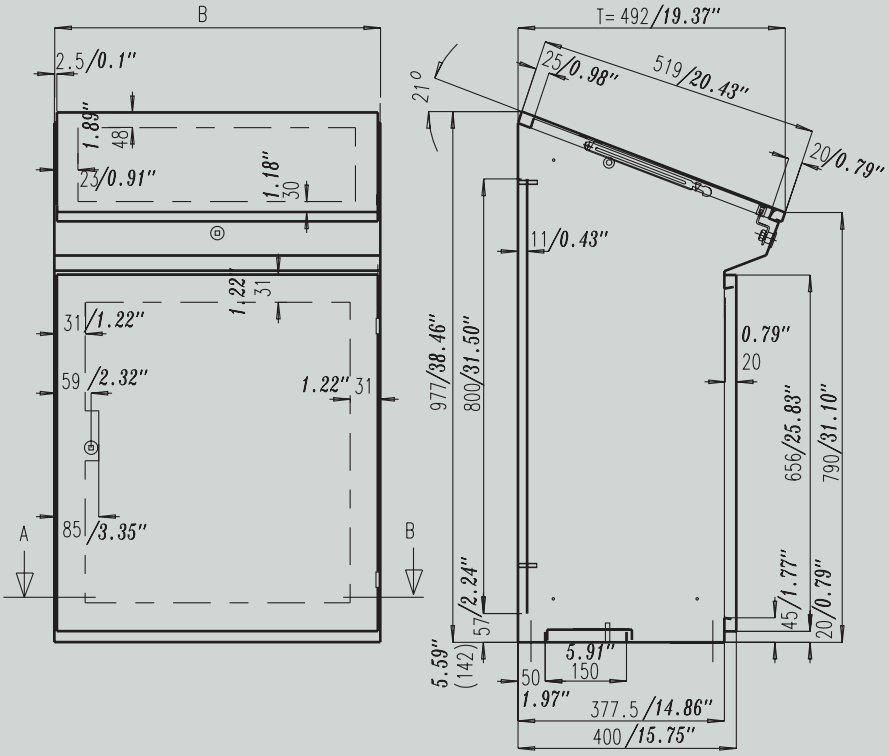

Dimension

Accessories

Bases, height 3.94“ Details ➜ **page 208**

	Description	Dimensions		Hole dimension (S)		Dimension T		Order No.
		mm	inch	mm	inch	mm	inch	
	Mounting holes: Ø 0.47“ in top and bottom, for attachment to console or base	600	23.62	335	13.19	380	14.96	**0346-6001-40-17**
		800	31.5	335	13.19	380	14.96	**0346-8001-40-17**

Bases, height 7.87“ Details ➜ **page 208**

	Description	Dimensions		suitable for depth		Order No.
		mm	inch	mm	inch	
	Quick and easy installation High lifting capacity	500	19,68	400	15,75	**0346-5002-40-07**
		600	23,62	400	15,75	**0346-6002-40-07**
		800	31,5	400	15,75	**0346-8002-40-07**
		1.000	39,37	400	15,75	**0346-1002-40-07**

H122 Consoles

Features
- Consoles with or without mounting plate
- Ergonomically designed console assures optimum viewing and operation of control devices

Product Description
- Ground connection: On console, doors and mounting plate
- Console top; Opening struts on right side (if W=31.50“ on both sides)
- Front door: Opening angle 180°, mounting on right or left side
- Seal: Foamed seal corresponding to protection class IP 559 to EN 60529, Nema 12
- Rear panel: closed
- Lock: Latch lock double mandrel 3 mm
- Cable entry plate: Secured from inside
- Mounting plate: Galvanized sheet steel, adjustable over entire,
- Excellent surface finish protection with improved pretreatment of the sheet metals by iron phosphatization and chrome-free repassivation as well as pollution free powder coating

Technical Data
- Deph: 492 mm
- Grounding per DIN EN 60439-1,
- Salzsprühtest nach DIN 50021-500 Stunden
- Material: Sheet steel
- Surface finish: Powder coated RAL 7035
- Metal thickness frame: 1.5 mm; 16 ga
- Metal thickness Mounting plate: 2.5 mm; 12 ga
- Material thickness Consoles top: 2 mm; 14 ga
- Protection class: construction based on IP55

Scope of Delivery
- Console complete with cable entry plate

Accessories
- Bases 0346, heigt 3.94“ [1] ➜ page 83

Dimensions (WxHxD)		Weight		Order No.
mm	inch	kg	lbs	
600 x 900 x 450	23.62 x 35.43 x 17.72			**0322-6090-45-07**
600 x 900 x 450	23.62 x 35.43 x 17.72	49	108.04	**0322-6090-45-17**
700 x 900 x 450	27.56 x 35.43 x 17.72			**0322-7090-45-07**
700 x 900 x 450	27.56 x 35.43 x 17.72	56	123.48	**0322-7090-45-17**
800 x 900 x 450	31.5 x 35.43 x 17.72			**0322-8090-45-07**
800 x 900 x 450	31.5 x 35.43 x 17.72	64	141.12	**0322-8090-45-17**
1,000 x 900 x 450	39.37 x 35.43 x 17.72			**0322-1090-45-07**
1,000 x 900 x 450	39.37 x 35.43 x 17.72	75	165.38	**0322-1090-45-17**
1,200 x 900 x 450	47.24 x 35.43 x 17.72			**0322-1290-45-07**
1,200 x 900 x 450	47.24 x 35.43 x 17.72	96	211.68	**0322-1290-45-17**
1,600 x 900 x 450	62.99 x 35.43 x 17.72			**0322-1690-45-07**
1,600 x 900 x 450	62.99 x 35.43 x 17.72	115	253.58	**0322-1690-45-17**
2,000 x 900 x 450	78.74 x 35.43 x 17.72			**0322-2090-45-07**
2,000 x 900 x 450	78.74 x 35.43 x 17.72	140	308.7	**0322-2090-45-17**
800 x 900 x 650	31.5 x 35.43 x 25.59			**0322-8090-65-07**
800 x 900 x 650	31.5 x 35.43 x 25.59	86	189.63	**0322-8090-65-17**
1,000 x 900 x 650	39.37 x 35.43 x 25.59			**0322-1090-65-07**
1,000 x 900 x 650	39.37 x 35.43 x 25.59	106	233.73	**0322-1090-65-17**
1,200 x 900 x 650	47.24 x 35.43 x 25.59			**0322-1290-65-07**
1,200 x 900 x 650	47.24 x 35.43 x 25.59	125	275.62	**0322-1290-65-17**
1,600 x 900 x 650	62.99 x 35.43 x 25.59			**0322-1690-65-07**
1,600 x 900 x 650	62.99 x 35.43 x 25.59	159	350.6	**0322-1690-65-17**

häwa

Technical Information

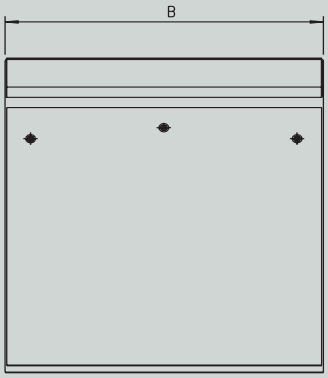

Dimension

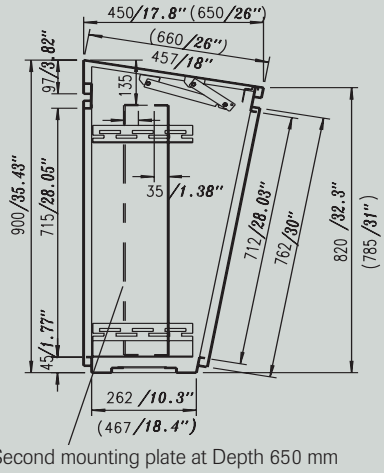

Second mounting plate at Depth 650 mm

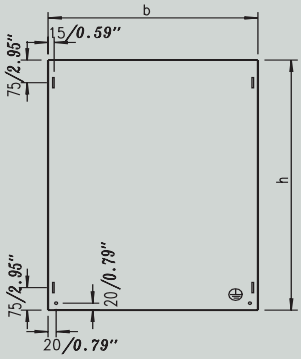

Mounting plate

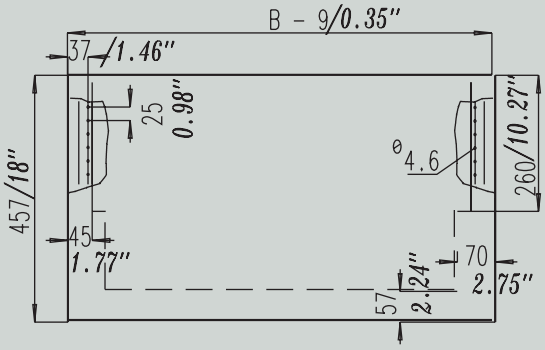

Console top

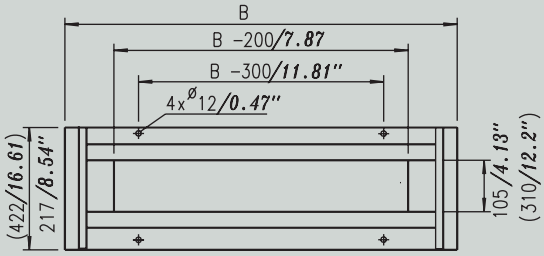

Base mounting and cable entry

Accessories

Mounting plate 0320 Details ➜ **page 210**

	Description	suitable for width mm	suitable for width inch	Order No.
	Depth variable	600	23.62	**0320-0060-72-13**
		700	27.56	**0320-0070-72-13**
		800	31.5	**0320-0080-72-13**
		1,000	39.37	**0320-0010-72-13**
		1,200	47.24	**0320-0012-72-13**
		1,600	62.99	**0320-0016-72-13**
		2,000	78.74	**0320-0020-72-13**

Bases, height 3.94“ Details ➜ **page 208**

	Description	Dimensions mm	Dimensions inch	Hole dimension (S) mm	Hole dimension (S) inch	Dimension T mm	Dimension T inch	Order No.
	Mounting holes: Ø 0.47“ in top and bottom, for attachment to console or base	600	23.62	217	8.54	262	10.31	**0346-6001-26-17**
		700	27.56	217	8.54	262	10.31	**0346-7001-26-17**
		800	31.5	217	8.54	262	10.31	**0346-8001-26-17**
		1,000	39.37	217	8.54	262	10.31	**0346-1001-26-17**
		1,200	47.24	217	8.54	262	10.31	**0346-1201-26-17**
		1,600	62.99	217	8.54	262	10.31	**0346-1601-26-17**
		2,000	78.74	217	8.54	262	10.31	**0346-2001-26-17**
		800	31.5	435	17.13	480	18.9	**0346-8001-50-17**
		1,000	39.37	435	17.13	480	18.9	**0346-1001-50-17**
		1,200	47.24	435	17.13	480	18.9	**0346-1201-50-17**
		1,600	62.99	435	17.13	480	18.9	**0346-1601-50-17**

H123 Consoles

Features
- Consoles with or without mounting plate
- Ergonomically designed console assures optimum viewing and operation of control devices

Product Description
- Ground connection: On console, doors and mounting plate
- Console top; Opening struts on right side (if W=31.50“ on both sides)
- Front door: Opening angle 180°, mounting on right or left side
- Seal: Foamed seal corresponding to protection class IP 559 to EN 60529, Nema 12
- Rear panel: closed
- Lock: Latch lock double mandrel 3 mm
- Cable entry plate: Secured from inside
- Mounting plate: Galvanized sheet steel, adjustable over entire,
- Excellent surface finish protection with improved pretreatment of the sheet metals by iron phosphatization and chrome-free repassivation as well as pollution free powder coating

Technical Data
- Depth: 492 mm in bottom sections, in top section it can be up to 650.
- Grounding per DIN EN 60439-1,
- Salzsprühtest nach DIN 50021-500 Stunden
- Material: Sheet steel
- Surface finish: Powder coated RAL 7035
- Metal thickness frame: 1.5 mm; 16 ga
- Metal thickness Mounting plate: 2.5 mm; 12 ga
- Material thickness Consoles top:: 2 mm; 4 ga
- Protection class: construction based on IP55

Scope of Delivery
- Console complete with cable entry plate

Accessories
- Bases 0346, heigt 3.94“ ➜ page 85
- Mounting plate 0320 ➜ page 85

Dimensions (WxHxD)		Weight		Order No.
mm	inch	kg	lbs	
600 x 900 x 650	23.62 x 35.43 x 25.59			**0323-6090-65-07**
600 x 900 x 650	23.62 x 35.43 x 25.59	56	123.48	**0323-6090-65-17**
800 x 900 x 650	31.5 x 35.43 x 25.59			**0323-8090-65-07**
800 x 900 x 650	31.5 x 35.43 x 25.59	68	149.94	**0323-8090-65-17**
1,000 x 900 x 650	39.37 x 35.43 x 25.59			**0323-1090-65-07**
1,000 x 900 x 650	39.37 x 35.43 x 25.59	83	183.02	**0323-1090-65-17**
1,200 x 900 x 650	47.24 x 35.43 x 25.59			**0323-1290-65-07**
1,200 x 900 x 650	47.24 x 35.43 x 25.59	95	209.48	**0323-1290-65-17**
1,600 x 900 x 650	62.99 x 35.43 x 25.59			**0323-1690-65-07**
1,600 x 900 x 650	62.99 x 35.43 x 25.59	125	275.62	**0323-1690-65-17**

Technical Information

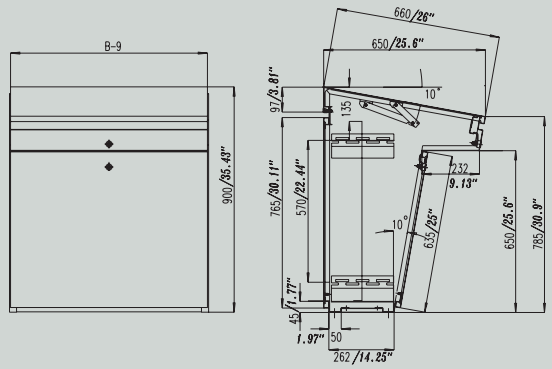

Dimensions

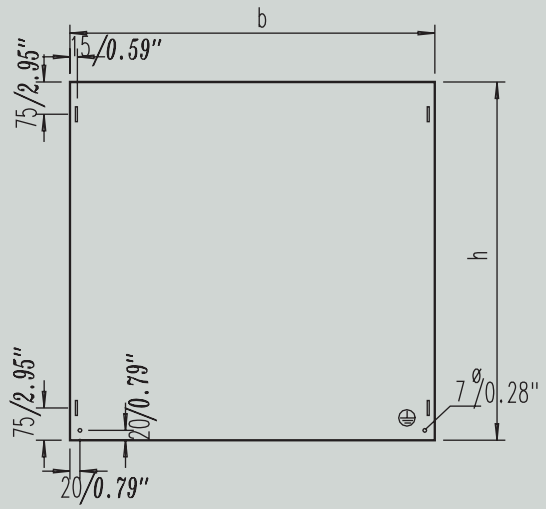

Mounting plate

häwa

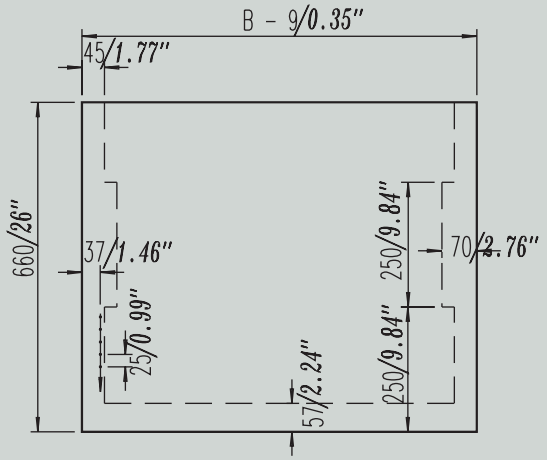

Console panel

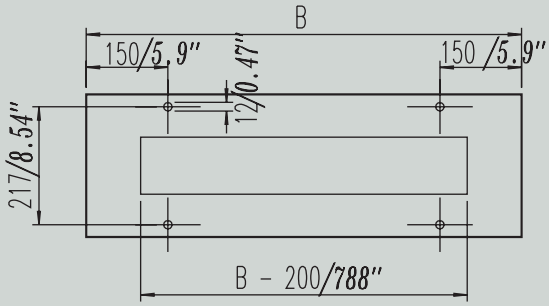

Base mounting

Accessories

Mounting plate 0320 Details ➜ **page 210**

	Description	suitable for width mm	suitable for width inch	Order No.
	Depth variable	600	23.62	**0320-0060-72-13**
		800	31.5	**0320-0080-72-13**
		1,000	39.37	**0320-0010-72-13**
		1,200	47.24	**0320-0012-72-13**
		1,600	62.99	**0320-0016-72-13**

Bases, height 3.94“ Details ➜ **page 208**

	Description	Dimensions mm	Dimensions inch	Hole dimension (S) mm	Hole dimension (S) inch	Dimension T mm	Dimension T inch	Order No.
	Mounting holes: Ø 0.47“ in top and bottom, for attachment to console or base	600	23.62	217	8.54	262	10.31	**0346-6001-26-17**
		800	31.5	217	8.54	262	10.31	**0346-8001-26-17**
		1,000	39.37	217	8.54	262	10.31	**0346-1001-26-17**
		1,200	47.24	217	8.54	262	10.31	**0346-1201-26-17**
		1,600	62.99	217	8.54	262	10.31	**0346-1601-26-17**

Flange Mount Disconnects

Safe and secure mechanical locking mechanism for single cabinets and master/slave cabinet systems.

The master cabinet is based on either the standard free-standing cabinets H370/H390 or the standard modular cabinets H375 /H395, but with divided disconnect door.

The disconnect door is available hinged left or right side and has cut-outs for the following disconnect switches::

- **Allen Bradley 1494 V-H1**
- **Square D 9422 A 1**
- **General Electric TDA Typ 1 und 2**

Optional as well:

- **Moeller NZM - X5HGVR 12-NA**
- **ITE Siemens Max-Flex Serie / FHOH (available only in North America)**

Slave cabinets match the standard modular cabinets H375/ H395 with hinges door on the right side. Slave door can be opened only after the master door has been opened. The disconnect switch must be in the “OFF”-position. Slave doors can be closed after master door is closed.

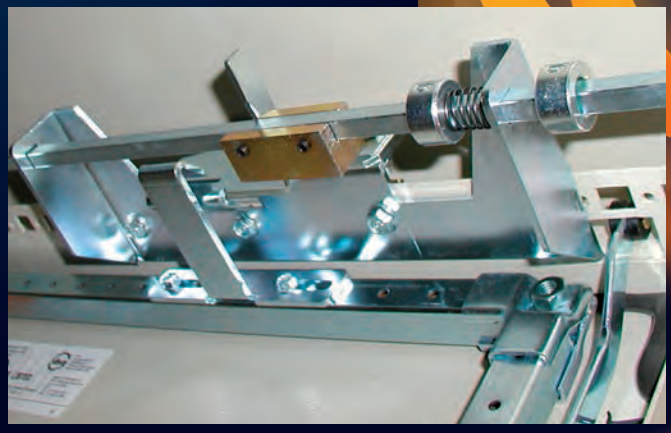

häwa

The häwa flange mounted disconnects cabinets:

- Accurate engineering and manufacturing guarantee safe and reliable functionality of master and slave locking mechanisms
- High quality components ensure dependable longevity of the häwa system
- Up to 7 m (23 ft) of slave cabinets can be mechanically opened when the master door is unlocked
- Modifications are available on request, e.g. welded disconnect panel, 90° direction change, custom dimensions

Our consultants are at your service.

Flange mounted disconnect

The master cabinet is based on either the standard free-standing cabinets H370/H390 or the standard modular cabinets H375 /H395, but with divided disconnect door. The cabinet sizes can be chosen from our standard sizes or can be customized based on your application.

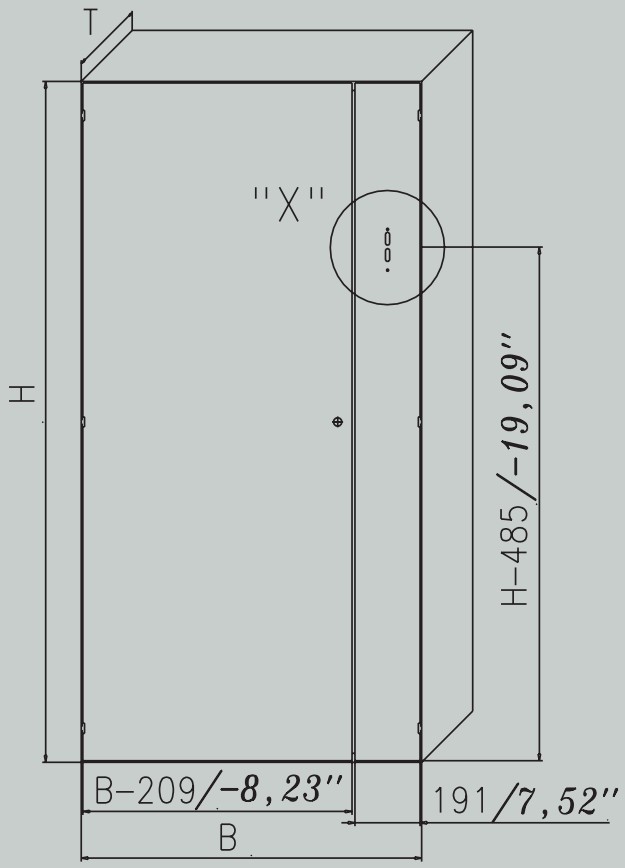

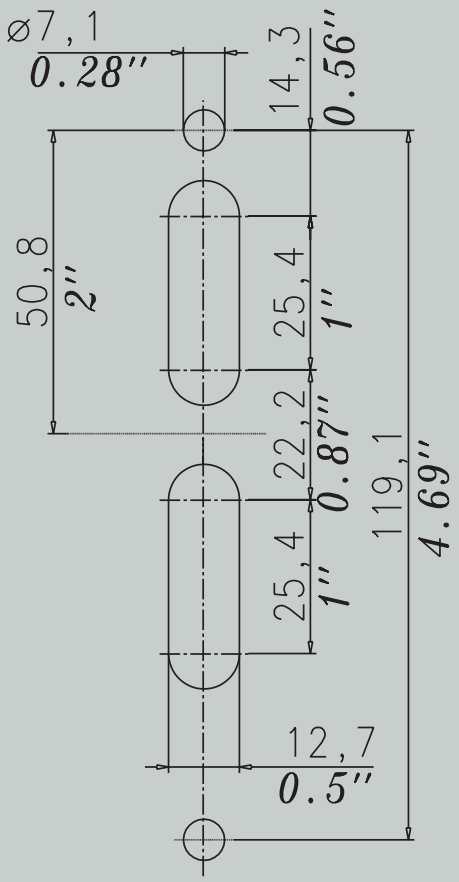

The disconnect door is available hinged left or right side and has cut-outs for the following disconnect switches:

- **Allen Bradley 1494 V-H1**
- **Square D 9422 A 1**
- **General Electric TDA Typ 1 und 2**

Optional as well:

- **Moeller NZM - X5HGVR 12-NA**
- **ITE Siemens Max-Flex Serie / FHOH (available only in North America)**

The häwa disconnect door sets (main door plus hinged disconnect panel) can be retrofitted to all standard häwa free-standing and modular cabinets.

An example to order a disconnect cabinet is shown on page 89. The master cabinet is equipped with the disconnect door set. The slave cabinets can be delivered with respective hardware if desired.

Example: Ordering of master cabinet with disconnect:

Type	Order No.	
	with mounting plate	without mounting plate
H370 Free standing cabinet	0370-. . . .-. 0-18 or -19	0370-. . . .-. 0-08 or -09
H390 Free standing cabinet	0390-. . . .-. 0-18 or -19	0370-. . . .-. 0-08 or -09
H375 Modular cabinet	0375-. . . .-. 0-18 or -19	0370-. . . .-. 0-08 or -09
H395 Modular cabinet	0395-. . . .-. 0-18 or -19	0370-. . . .-. 0-08 or -09

After selecting of cabinet size for our standard offering, the last two digits will be replaced with the listed.

Ending in -18 or -08 refer to left-mounted disconnect systems.

Ending in -18 or -08 refer to right-mounted disconnect systems.

Master and slave cabinet
left mounted version

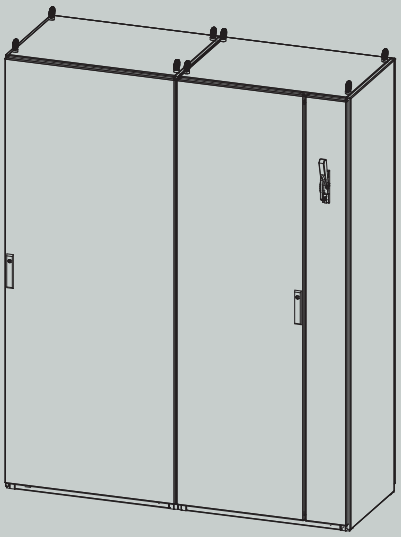

Master and slave cabinet
right mounted version

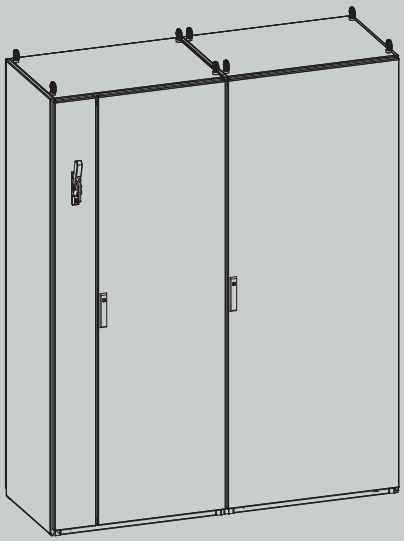

The required slave cabinet disconnect mechanical can be selected per the list below:

Master door disconnect system left: left front panel
3070-7802-04-10

Slave door disconnect system left: Disconnect door left, slave cabinets are to the right of master cabinet
3070-7802-06-10 cabinet widht 600
3070-7802-08-10 cabinet widht 800
3070-7802-10-10 cabinet widht 1000
3070-7802-12-10 cabinet widht 1200

Slide bar actuator left:
3070-7802-19-14

(for multiple slave cabinets) Rod extender:
3070-7802-50-03

Master door disconnect system right: right front panel
3070-7802-04-00

Slave door disconnect system right: Disconnect door left, slave cabinets are to the left of master cabinet
3070-7802-06-10 cabinet widht 600
3070-7802-08-10 cabinet widht 800
3070-7802-10-10 cabinet widht 1000
3070-7802-12-10 cabinet widht 1200

Rod End Bracket:
3070-7802-23-04 (B-1200)

Slide bar actuator right:
3070-7802-23-04

(for multiple slave cabinets) Rod extender:
3070-7802-50-03

Delivery includes:
1 Master cabinet with doors and installation manual (3080-0802-M0-15 for left side disconnect or 3080-0802-M0-16 for right side disconnect).

Disconnect system – Master door disconnect system

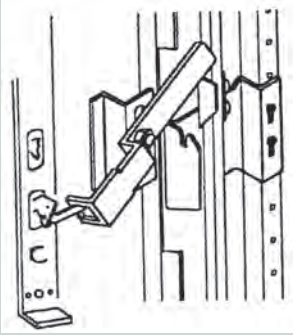

Features
- Designed for H370, H375, H390, H395
- high reliability

Product Description
The disconnect system is designed for use with the following disconnect switches:
- Square D9422 AI
- Allen Bradley 1494 V-HI
- General Electric TDA Typ 1 und 2
Optional as well:
- Moeller NZM-X5HGVR 12-NA
- ITE Siemens Max-Flex Serie IFHOH (available only in North America)

Scope of Delivery
- 1 master cabinet disconnect incl. hardware and installation manual 3070-0802-MO-07 or 3070-0802-MO-06

Note
For free standing and modular cabinets
(Custom modification available on reques)

Order No.	
right mounted version	**left mounted version**
3070-7802-04-00	**3070-7802-04-10**

Disconnect system – Slave door disconnect system

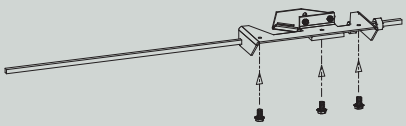

Features
- Designed for H375, H395
- Extension of locking mechanism to master disconnect
- Quick assembly
- high reliability

Product Description
- Slave cabinet door can only be opened after the master cabinet door is opened
- Slave door disconnect system completely pre-assembled
- Easy installation in cabinet

Scope of Delivery
- 1 slave cabinet disconnect incl. hardware and installation manual
- right mounted version for B-600/800/1000: part-no. 307-0802-MO-09
- right mounted version for B-1200: part-no. 3080-0802-MO-13
- left mounted version for B-600/800/1000: part-no. 307-0802-MO-08
- left mounted version for B-1200: part-no. 3080-0802-MO-14

Note
Only for modular cabinets
Modifications available of request.

Accessories
- Slide bar actuator ➜ page 91
- Rod extender ➜ page 91
- Rod end bracket (only for right mounted version) ➜ page 91

suitable for weight		Order No.	
		right mounted version	**left mounted version**
mm	inch		
600	23,62	3070-7802-06-00	3070-7802-06-10
800	31,5	3070-7802-08-00	3070-7802-08-10
1.000	39,37	3070-7802-10-00	3070-7802-10-10
1.200	47,24	3070-7802-12-00	3070-7802-12-10

häwa

Slide bar actuator

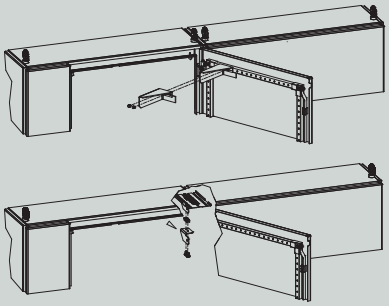

Features
- For installation in master cabinets H375/H395

Product Description
To activate slave cabinet door in designated are

Scope of Delivery
- 1 Slide bar actuator with hardware

Note
Installation manual is included with slave door disconnect system

	Order No.	
	right mounted version	left mounted version
	3070-7802-19-04	3070-7802-19-14

Rod extender

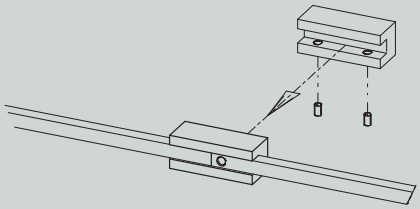

Features
- Expansion of slave cabinet disconnect system

Product Description
For connection slave cabinet-slave cabinet
From the second slave cabinet

Scope of Delivery
- 1 rod extender with hardware

Note
Installation manual is included with slave door disconnect system

	Order No.
	3070-7802-50-03

Rod end Bracket

Features
- For systems with right-mounted version (master cabinet on right; slave cabinet on left)

Product Description
only for 47.24“ wide slave cabinets with right hand disconnects.

Scope of Delivery
- 1 rod end bracket with hardware

Note
Installation manual is included with slave door disconnect system

	Order No.
	3070-7802-23-04

häwa

häwa‘s values go far beyond the outside shell ...

1

Side panel H395

Features
- For installation of outward side panels of modular cabinets H395

Technical Data
- Material: 14 ga steel
- Surface finish: Powder coated RAL 7035

Further technical information ➜ below

Scope of Delivery
- 1 set of side panels with foamed rubber gasket and mounting hardware

Accessories
- Enhancement kits IP 56 for H395/H375 ➜ page 95

suitable for height		suitable for depth		Dimension HS		Dimension TS				**Order No.**
mm	inch	mm	inch	mm	inch	mm	inch	mm	inch	
1,600	62.99	400	15.75	1,596	62.83	350	13.78	350	13.78	**0396-7016-40-67**
1,800	70.87	400	15.75	1,796	70.71	350	13.78	350	13.78	**0396-7018-40-67**
2,000	78.74	400	15.75	1,996	78.58	350	13.78	350	13.78	**0396-7020-40-67**
1,800	70.87	500	19.69	1,796	70.71	450	17.72	450	17.72	**0396-7018-50-67**
2,000	78.74	500	19.69	1,996	78.58	450	17.72	450	17.72	**0396-7020-50-67**
1,600	62.99	600	23.62	1,596	62.83	550	21.65	550	21.65	**0396-7016-60-67**
1,800	70.87	600	23.62	1,796	70.71	550	21.65	550	21.65	**0396-7018-60-67**
2,000	78.74	600	23.62	1,996	78.58	550	21.65	550	21.65	**0396-7020-60-67**
2,200	86.61	600	23.62	2,196	86.46	550	21.65	550	21.65	**0396-7022-60-67**
1,600	62.99	800	31.5	1,596	62.83	750	29.53	750	29.53	**0396-7016-80-67**
1,800	70.87	800	31.5	1,796	70.71	750	29.53	750	29.53	**0396-7018-80-67**
2,000	78.74	800	31.5	1,996	78.58	750	29.53	750	29.53	**0396-7020-80-67**

Technical Information

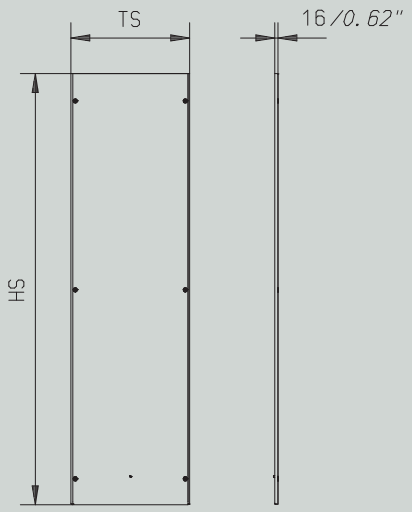

häwa

Accessories

Enhancement kits IP 56 for H395/H375 Details ➜ **page 174**

Description	Order No.
To increase IP rating for all H395 and H375 modular cabinets	**0396-7056-01-00**

Bases height 3.94“

Features

- For free-standing single and ganged-together modular cabinets
- Rugged U-profiles
- High lifting capacity

Product Description

Base for installation under cabinets. For ganged-together modular H395 cabinets the side panels are not installed to get a continuous room for cable distribution. Excellent surface finish protection with improved pretreatment of the sheet metals by iron phosphatization and chrome-free repassivation as well as pollution free powder coating.

Technical Data

- Material: 14 ga steel
- Surface finish: Powder coated RAL 7022

Further technical information ➜ page 96

Scope of Delivery

- Base complete, unassembled, with assembly and mounting hardware

Note

Bases with order numbers ending in “-27” are designed with cable entry vents, which are equipped with brushes. These bases are recommended for type 2096 PC-cabinets. Bases with order numbers ending in “-37” are equipped with air vents for improved air circulation.
If used with cabinet H390, an offset of 25 mm will be in the back.

Accessories

- Filter pads ➜ page 96

Dimension S		suitable for width		suitable for depth		Dimension T		Order No.	
mm	inch	mm	inch	mm	inch	mm	inch		**with ventilation slots**
305	12.01	600	23.62	400	15.75	350	13.78	**0396-6001-40-17**	
305	12.01	800	31.5	400	15.75	350	13.78	**0396-8001-40-17**	
305	12.01	1,000	39.37	400	15.75	350	13.78	**0396-1001-40-17**	
305	12.01	1,200	47.24	400	15.75	350	13.78	**0396-1201-40-17**	
405	15.94	600	23.62	500	19.69	450	17.72	**0396-6001-50-17**	
405	15.94	800	31.5	500	19.69	450	17.72	**0396-8001-50-17**	
405	15.94	1,000	39.37	500	19.69	450	17.72	**0396-1001-50-17**	
405	15.94	1,200	47.24	500	19.69	450	17.72	**0396-1201-50-17**	
505	19.88	600	23.62	600	23.62	550	21.65	**0396-6001-60-17**	**0396-6001-60-37**
505	19.88	800	31.5	600	23.62	550	21.65	**0396-8001-60-17**	**0396-8001-60-37**
505	19.88	1,000	39.37	600	23.62	550	21.65	**0396-1001-60-17**	
505	19.88	1,200	47.24	600	23.62	550	21.65	**0396-1201-60-17**	
705	27.76	600	23.62	800	31.5	750	29.53	**0396-6001-80-17**	**0396-6001-80-37**
705	27.76	800	31.5	800	31.5	750	29.53	**0396-8001-80-17**	**0396-8001-80-37**

Technical Information

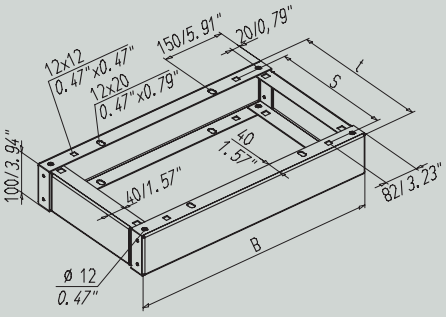

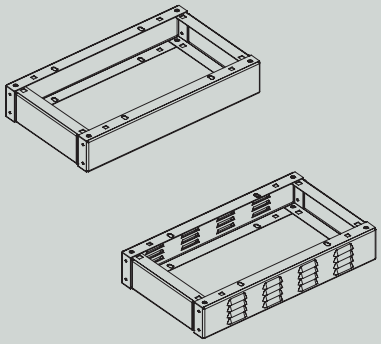

Accessories

Filter pads Details ➜ **page 193**

	Order No.
	0346-8000-00-01

Bases height 3.94“

Features
- For free-standing single and ganged-together modular cabinets
- Rugged U-profiles
- High lifting capacity

Product Description
Base for installation under cabinets. For ganged-together modular H395 cabinets the side panels are not installed to get a continuous room for cable distribution. Excellent surface finish protection with improved pretreatment of the sheet metals by iron phosphatization and chrome-free repassivation as well as pollution free powder coating.

Technical Data
- Material: 14 ga steel
- Surface finish: Powder coated RAL 7035

Further technical information ➜ page 97

Scope of Delivery
- Base complete, unassembled, with assembly and mounting hardware

Note
The back of the bases is flush with the cabinets.

Dimensions S		suitable for width		suitable for depth		Dimensions T		Order No.
mm	inch	mm	inch	mm	inch	mm	inch	
330	12,99	600	23,62	400	15,75	375	14,76	**0396-6001-41-17**
330	12,99	800	31,5	400	15,75	375	14,76	**0396-8001-41-17**
330	12,99	1.000	39,37	400	15,75	375	14,76	**0396-1001-41-17**
330	12,99	1.200	47,24	400	15,75	375	14,76	**0396-1201-41-17**
330	12,99	1.600	62,99	400	15,75	375	14,76	**0396-1601-41-17**
330	12,99	2.000	78,74	400	15,75	375	14,76	**0396-2001-41-17**
430	16,93	600	23,62	500	19,69	475	18,7	**0396-6001-51-17**
430	16,93	800	31,5	500	19,69	475	18,7	**0396-8001-51-17**
430	16,93	1.000	39,37	500	19,69	475	18,7	**0396-1001-51-17**
430	16,93	1.200	47,24	500	19,69	475	18,7	**0396-1201-51-17**
430	16,93	1.600	62,99	500	19,69	475	18,7	**0396-1601-51-17**
430	16,93	2.000	78,74	500	19,69	475	18,7	**0396-2001-51-17**

häwa

Dimension S		suitable for width		suitable for depth		Dimension T		**Order No.**
mm	inch	mm	inch	mm	inch	mm	inch	
530	20,87	600	23,62	600	23,62	575	22,64	**0396-6001-61-17**
530	20,87	800	31,5	600	23,62	575	22,64	**0396-8001-61-17**
530	20,87	1.000	39,37	600	23,62	575	22,64	**0396-1001-61-17**
530	20,87	1.200	47,24	600	23,62	575	22,64	**0396-1201-61-17**
530	20,87	1.600	62,99	600	23,62	575	22,64	**0396-1601-61-17**
530	20,87	2.000	78,74	600	23,62	575	22,64	**0396-2001-61-17**

Technical Information

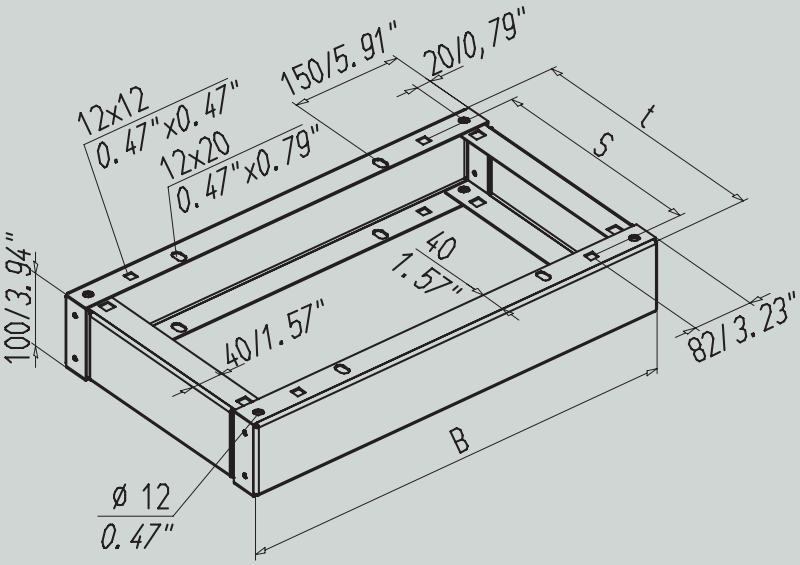

Bases height 7.87“

Features
- Quick and easy installation
- For free-standing single and ganged-together modular cabinets
- High lifting capacity

Product Description
Bases for installation under cabinets. Two-level perforation on the inside for mounting of cable support rails. For ganged together cabinets side-pieces can be removed for end-to-end cable installations. Corner pieces are already pre-assembled with front and back pieces. Side pieces can be installed without tools. Front & back pieces are removeable after assembly for easy access to underside of cabinet.

Technical Data
- Surface finish: Powder coated RAL 7035

Further technical information ➜ page 99

Scope of Delivery
- Corner pieces with front and back pieces pre-assembled and side pieces (1 packet each). Mounting hardware and installation instructions.

Note
To achieve highest stability for transportation purposes, the side pieces can be screwed in and the corner pieces have a second mounting hole that can be utilized.
Bases with order numbers ending in “-37” are equipped with air vents for improved air circulation. If used with cabinet H390, an offset of 25 mm will be in the back.
If bases are ganged together, a base cross rail is required for mounting of cable support rails.

Accessories
- Filter pads ➜ page 99
- Base Cross rail ➜ page 99
- 3.94“ high vertical base panel ➜ page 99

suitable for width		suitable for depth		Dimension T		**Order No.**	
mm	inch	mm	inch	mm	inch		**with ventilation slots**
600	23,62	400	15,75	350	13,78	**0396.6002.40.17**	
800	31,5	400	15,75	350	13,78	**0396.8002.40.17**	
850	33,46	400	15,75	350	13,78	**0396.8502.40.17**	
1.000	39,37	400	15,75	350	13,78	**0396.1002.40.17**	
1.100	43,31	400	15,75	350	13,78	**0396.1102.40.17**	
1.200	47,24	400	15,75	350	13,78	**0396.1202.40.17**	
400	15,75	500	19,69	450	17,72	**0396.4002.50.17**	
600	23,62	500	19,69	450	17,72	**0396.6002.50.17**	
800	31,5	500	19,69	450	17,72	**0396.8002.50.17**	
1.000	39,37	500	19,69	450	17,72	**0396.1002.50.17**	
1.200	47,24	500	19,69	450	17,72	**0396.1202.50.17**	
400	15,75	600	23,62	550	21,65	**0396.4002.60.17**	
600	23,62	600	23,62	550	21,65	**0396.6002.60.17**	**0396.6002.60.37**
800	31,5	600	23,62	550	21,65	**0396.8002.60.17**	**0396.8002.60.37**
1.000	39,37	600	23,62	550	21,65	**0396.1002.60.17**	
1.200	47,24	600	23,62	550	21,65	**0396.1202.60.17**	
600	23,62	800	31,5	750	29,53	**0396.6002.80.17**	**0396.6002.80.37**
800	31,5	800	31,5	750	29,53	**0396.8002.80.17**	**0396.8002.80.37**

häwa

Technical Information

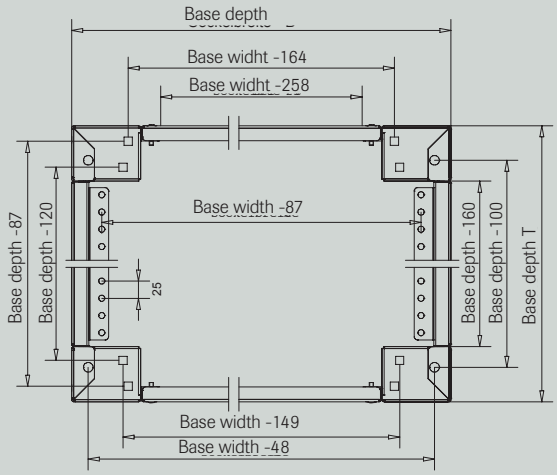

Filter pad Details ➜ **Seite 193**

Order No.
0346-8000-00-01

Accessories

Base Cross rail Details ➜ **page 102**

Description	suitable for depth mm	suitable for depth inch	Order No.
Base cross rail for installation in upper or lower section of 200 mm high base. Additional strengthening of ganged together bases To build multiple levels within base	400	15.75	**0396-0000-40-07**
	500	19.69	**0396-0000-50-07**
	600	23.62	**0396-0000-60-07**
	800	31.5	**0396-0000-80-07**

Hex attachment screw Details ➜ **page 182**

Order No.
0348-7500-06-12

Hex-nut Verbus Tensilock Details ➜ **page 183**

Description	Thread	Order No.
Self-locking nuts for use without washer	M 6	**3003-9500-06-00**

3.94“ high vertical base panel Details ➜ **page 102**

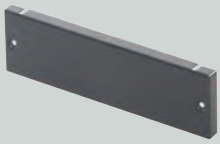

Description	suitable for width mm	suitable for width inch	Order No.
Option for 7.87“ high vertical panels For use with 200 mm high bases.	400	15.75	**0396-4002-01-07**
	600	23.62	**0396-6002-01-07**
	800	31.5	**0396-8002-01-07**
	1,000	39.37	**0396-1002-01-07**
	1,200	47.24	**0396-1202-01-07**

Base height 7.87“ for H390 Cabinets

Features
- For free-standing single and ganged-together modular cabinets
- Rugged U-profiles
- High lifting capacity

Product Description
Bases for installation under cabinets. Two-level perforation on the inside for mounting of cable support rails. For ganged together cabinets side-pieces can be removed for end-to-end cable installations. Corner pieces are already pre-assembled with front and back pieces. Side pieces can be installed without tools. Front & back pieces are removeable after assembly for easy access to underside of cabinet.

Technical Data
- Surface finish: Powder coated RAL 7022

Further technical information ➜ page 101

Scope of Delivery
- Bases with widths 1600/2000 consist of 2 packets each for corner pieces with front and back plates and the side pieces.

Accessories
- Base Cross rail ➜ page 101
- 3.94“ high vertical base panel ➜ page 101

Dimensions		suitable for width		suitable for depth		**Order No.**
mm	inch	mm	inch	mm	inch	
375	14.76	600	23.62	400	15.75	**0396.6002.41.17**
375	14.76	800	31.5	400	15.75	**0396.8002.41.17**
375	14.76	1,000	39.37	400	15.75	**0396.1002.41.17**
375	14.76	1,200	47.24	400	15.75	**0396.1202.41.17**
375	14.76	1,600	62.99	400	15.75	**0396.1602.41.17**
375	14.76	2,000	78.74	400	15.75	**0396.2002.41.17**
475	18.7	600	23.62	500	19.69	**0396.6002.51.17**
475	18.7	800	31.5	500	19.69	**0396.8002.51.17**
475	18.7	1,000	39.37	500	19.69	**0396.1002.51.17**
475	18.7	1,200	47.24	500	19.69	**0396.1202.51.17**
475	18.7	1,600	62.99	500	19.69	**0396.1602.51.17**
475	18.7	2,000	78.74	500	19.69	**0396.2002.51.17**
575	22.64	600	23.62	600	23.62	**0396.6002.61.17**
575	22.64	800	31.5	600	23.62	**0396.8002.61.17**
575	22.64	1,000	39.37	600	23.62	**0396.1002.61.17**
575	22.64	1,200	47.24	600	23.62	**0396.1202.61.17**
575	22.64	1,600	62.99	600	23.62	**0396.1602.61.17**
575	22.64	2,000	78.74	600	23.62	**0396.2002.61.17**

häwa

Technical Information

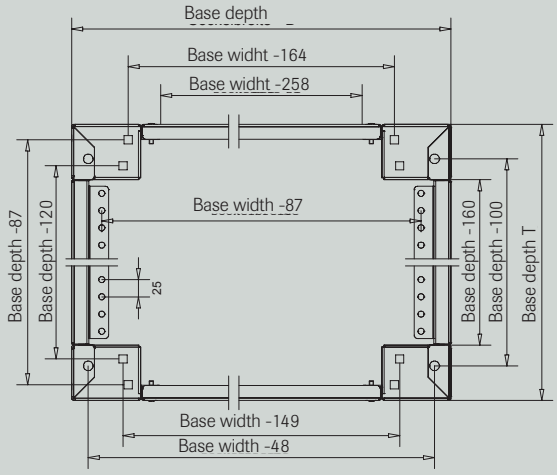

Accessories

Base Cross rail Details ➜ **page 102**

Description	suitable for depth mm	suitable for depth inch	Order No.
Base cross rail for installation in upper or lower section of 200 mm high base. Additional strengthening of ganged together bases To build multiple levels within base	400	15.75	**0396-0000-40-07**
	400	15.75	**0396-0000-41-07**
	500	19.69	**0396-0000-51-07**
	600	23.62	**0396-0000-61-07**

Hex attachment screw Details ➜ **page 182**

Order No.
0348-7500-06-12

Hex-nut Verbus Tensilock Details ➜ **page 183**

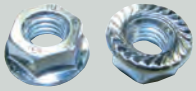

Description	Thread	Order No.
Self-locking nuts for use without washer	M 6	**3003-9500-06-00**

3.94“ high vertical base panel Details ➜ **page 102**

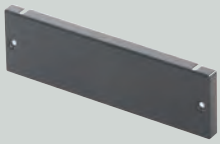

Description	suitable for width mm	suitable for width inch	Order No.
Option for 7.87“ high vertical panels For use with 200 mm high bases.	600	23.62	**0396-6002-01-07**
	800	31.5	**0396-8002-01-07**
	1,000	39.37	**0396-1002-01-07**
	1,200	47.24	**0396-1202-01-07**

3.94“ high vertical base panel

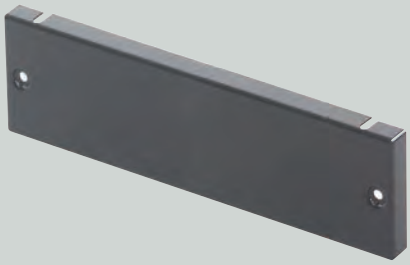

Features
- For use with 200 mm high bases.

Product Description
Option for 7.87“ high vertical panels

Technical Data
- Material: Sheet steel
- Surface finish: Powder coated RAL 7022

Further technical information ➜ below

Scope of Delivery
- 2 vertical panels without mounting hardware

suitable for width		Order No.
mm	inch	
400	15.75	**0396-4002-01-07**
600	23.62	**0396-6002-01-07**
800	31.5	**0396-8002-01-07**
1,000	39.37	**0396-1002-01-07**
1,200	47.24	**0396-1202-01-07**

Technical Information

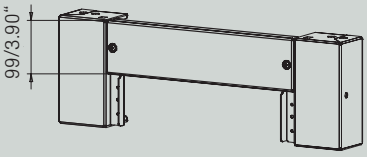

Base Cross rail

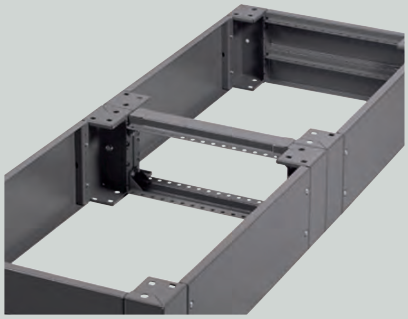

Features
- Additional strengthening of ganged together bases
- To build multiple levels within base

Product Description
Base cross rail for installation in upper or lower section of 200 mm high base.

Technical Data
- Material: 14 ga steel
- Surface finish: Powder coated RAL 7022

Scope of Delivery
- 1 set (2 pieces) base cross rail without mounting hardware

Note
Part numbers 0396-000-x1-07 only suitable for H390 cabinets

Accessories
- Hex-nut Verbus-Tensilock ➜ page 103

Length		suitable for depth		Order No.
mm	inch	mm	inch	
190	7.48	400	15.75	**0396-0000-40-07**
290	11.41	500	19.69	**0396-0000-50-07**
390	15.35	600	23.62	**0396-0000-60-07**
590	23.22	800	31.5	**0396-0000-80-07**
215	8.46	400	15.75	**0396-0000-41-07**
315	12.40	500	19.69	**0396-0000-51-07**
415	16.34	600	23.62	**0396-0000-61-07**

häwa

Accessories

Hex attachment screw Details ➜ **page 182**

Order No.
0348-7500-06-12

Hex-nut Verbus Tensilock Details ➜ **page 183**

Description	Thread	Order No.
Self-locking nuts for use without washer	M 6	**3003-9500-06-00**

Mobile base

Product Description

Suitable for 600 mm wide cabinets, 600 and 800 mm deep.

Technical Data

- Casters: 4 swing casters
- Load carrying capacity: approx. 529 lbs
- Material: 14 ga steel
- Surface finish: Powder coated RAL 7035

Further technical information ➜ page 103

Scope of Delivery

- Mobile base complete with four mounted casters.
- Casters are non-lockable

suitable for depth		Dimension complete depth		Order No.
mm	inch	mm	inch	
600	23.62	790	31.1	**0396-6000-60-27**
800	31.5	990	38.98	**0396-6000-80-27**

Technical Information

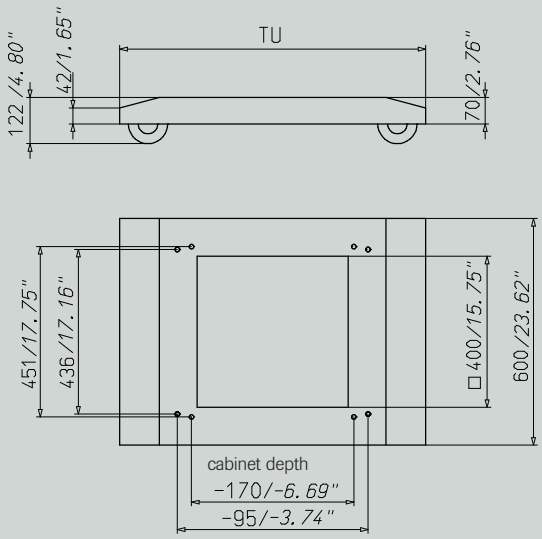

0396-Mobile base

Product Description
Suitable for 23.62“ wide cabinets, 23.62“ and 31.50“ depth

Technical Data
- Casters: Front swivel casters, rear fixed casters
- Load carrying capacity: 308 lbs/caster
- Material: 14 ga steel
- Surface finish: Powder coated RAL 7035, 16 ga steel

Further technical information ➜ page 104

Scope of Delivery
- Mobile base complete with rubber mat and mounted casters

Note
Mobile base is pre-punched for optional brake assemblies 3080-9108-35-02.

Accessories
- Brake assembly ➜ below

Dimension X		Dimensions		Order No.
mm	inch	mm	inch	
505	19.88	800	31.5	**0396-6010-60-27**
705	27.76	1,000	39.37	**0396-6010-80-27**

Technical Information

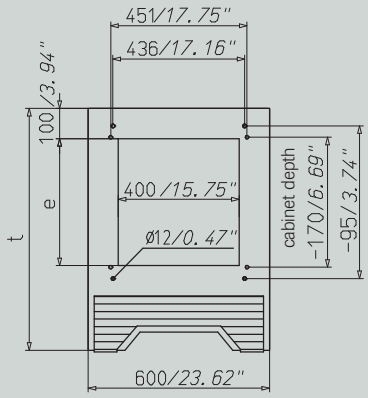

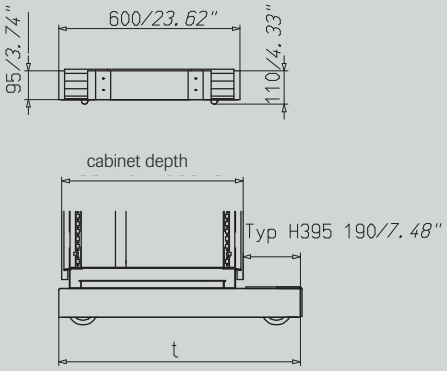

Accessories

Brake assembly Details ➜ **page 105**

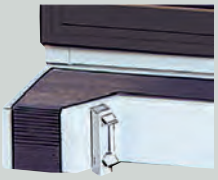

Description	Order No.
Prevents movement of mobile base **Compact** **Operates with pressure spring** **Quick and easy installation**	**3080-9108-35-02**

häwa

Brake assembly

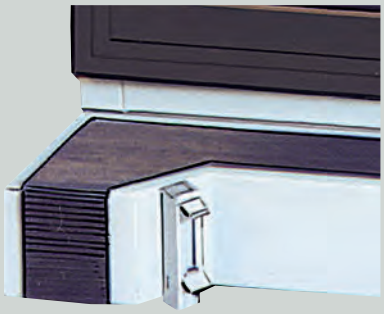

Features
- Compact
- Operates with pressure spring
- Quick and easy installation

Product Description
Prevents movement of mobile base

Scope of Delivery
- 1 set = 2 pieces with mounting hardware

suitable for
0396-Mobile base

	Order No.
	3080-9108-35-02

Technical Information

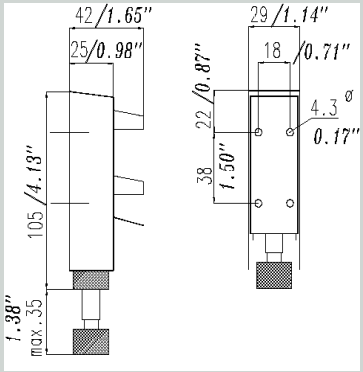

Depth Extension Frames

Features
- Depth Extension Frames

Product Description
Grounding per DIN EN 604389-1; connection via self-locking nuts
All combinations in related width and height are possible. 20X3 gasket provided on both sides to maintain IP 55.

Technical Data
- Material: 14 ga steel
- Surface finish: Powder coated RAL 7035

Scope of Delivery
- 1 piece depth extension frame with mounting hardware and installation manual part no. 0396-7000-08-77

Dimensions		Order No.
mm	inch	
600 x 1,800	23.62 x 70.87	**0395-6018-00-87**
600 x 2,000	23.62 x 78.74	**0395-6020-00-87**
800 x 1,800	800 x 70.87	**0395-8018-00-87**
800 x 2,000	31.5 x 78.74	**0395-8020-00-87**

Replacement doors – solid

Features
- Fit H390 and H395 cabinets
- Standard: hinged on right side

Product Description
- Changeable to hinged on left side
- With bolted reinforcement and attachment frame of solid square tubes perforated with 4.5 mm holes every 25 mm
- Seamless, foamed-in-place gasket for IP55 / NEMA 12 protection
- 2 grounding studs M8x20

Technical Data
- Material: 14 ga steel

Scope of Delivery
- Door complete with lock and hinges

Accessories
- Door support guide (for heavy doors with heavy equipment) ➜ below

Dimensions		Order No.	
		1 door	**2 doors**
mm	inch		
600 x 1.600	23,62 x 62,99	**0395-6016-00-97**	
600 x 1.800	23,62 x 70,87	**0395-6018-00-97**	**0395-6018-05-97**
600 x 2.000	23,62 x 78,74	**0395-6020-00-97**	**0395-6020-05-97**
600 x 2.200	23,62 x 86,61	**0395-6022-00-97**	**0395-6022-05-97**
800 x 1.600	31,5 x 62,99	**0395-8016-00-97**	
800 x 1.800	31,5 x 70,87	**0395-8018-00-97**	**0395-8018-05-97**
800 x 2.000	31,5 x 78,74	**0395-8020-00-97**	**0395-8020-05-97**
1.000 x 1.800	39,37 x 70,87	**0395-1018-00-97**	**0395-1018-05-97**
1.000 x 2.000	39,37 x 78,74	**0395-1020-00-97**	**0395-1020-05-97**
1.000 x 2.200	39,37 x 86,61	**0395-1022-00-97**	**0395-1022-05-97**
1.200 x 1.600	47,24 x 62,99	**0395-1216-00-97**	
1.200 x 1.800	47,24 x 70,87	**0395-1218-00-97**	**0395-1218-05-97**
1.200 x 2.000	47,24 x 78,74	**0395-1220-00-97**	**0395-1220-05-97**
1.200 x 2.200	47,24 x 86,61	**0395-1222-00-97**	**0395-1222-05-97**

Accessories

Door support guide (for heavy doors with heavy equipment) Details ➜ **page 108**

Order No.
0396-9009-00-00

häwa

Replacement doors – single doors for two-door cabinets

Features
- Fit H395 cabinets

Product Description
- With bolted reinforcement and attachment frame of solid square tubes perforated with 4.5 mm holes every 25 mm
- Seamless, foamed-in-place gasket for IP55 / NEMA 12 protection
- 2 grounding studs M8x20

Scope of Delivery
- Door complete with lock and hinges 120°

Accessories
- Door support guide (for heavy doors with heavy equipment) ➜ below

Dimensions		Order No.	
		left door	**right door**
mm	inch		
1.200 x 1.800	47,24 x 70,87	**0395-1218-01-97**	**0395-1218-02-97**
1.200 x 2.000	47,24 x 78,74	**0395-1220-01-97**	**0395-1220-02-97**

Accessories

Door support guide (for heavy doors with heavy equipment) Details ➜ **page 108**

Order No.
0396-9009-00-00

Side doors

Features
- Fit H390 and H395 cabinets

Product Description
- With bolted reinforcement and attachment frame of solid square tubes perforated with 4.5 mm holes every 25 mm
- Seamless, foamed-in-place gasket for IP55 / NEMA 12 protection
- 2 grounding studs M8x20

Technical Data
- Material: 14 ga steel
- Surface finish: Powder coated RAL 7035

Scope of Delivery
- 1 piece installation with latch and hinge 120° and manual part no. 0396-7000-07-77

Dimensions		suitable for height		suitable for depth		Order No.
mm	inch	mm	inch	mm	inch	
1,800 x 600	70.87 x 23.62	1,800	70.87	600	23.62	**0395-6018-07-97**
2,000 x 600	78.74 x 23.62	2,000	78.74	600	23.62	**0395-6020-07-97**
1,800 x 800	70.87 x 31.5	1,800	70.87	800	31.5	**0395-8018-07-97**
2,000 x 800	78.74 x 31.5	2,000	78.74	800	31.5	**0395-8020-07-97**

Rear wall

Features
- Fit H395

Product Description
- With bolted reinforcement and attachment frame of solid square tubes perforated with 4.5 mm holes every 25 mm
- Seamless, foamed-in-place gasket for IP55 / NEMA 12 protection
- 2 grounding studs M8x20

Technical Data
- Erdung nach DIN 60439-1
- Salzsprühtest nach DIN 50021-500 Stunden
- Material: Stahlblech 2 mm
- Surface finish: Powder coated RAL 7035

Scope of Delivery
- 1 Rear door

Dimensions		Order No.
mm	inch	
600 x 1,600	23.62 x 62.99	**0395-6016-03-97**
600 x 1,800	23.62 x 70.87	**0395-6018-03-97**
600 x 2,000	23.62 x 78.74	**0395-6020-03-97**
600 x 2,200	23.62 x 86.61	**0395-6022-03-97**
800 x 1,600	31.5 x 62.99	**0395-8016-03-97**
800 x 1,800	31.5 x 70.87	**0395-8018-03-97**
800 x 2,000	31.5 x 78.74	**0395-8020-03-97**
1,000 x 1,800	39.37 x 70.87	**0395-1018-03-97**
1,000 x 2,000	39.37 x 78.74	**0395-1020-03-97**
1,000 x 2,200	39.37 x 86.61	**0395-1022-03-97**
1,200 x 1,600	47.24 x 62.99	**0395-1216-03-97**
1,200 x 1,800	47.24 x 70.87	**0395-1218-03-97**
1,200 x 2,000	47.24 x 78.74	**0395-1220-03-97**
1,200 x 2,200	47.24 x 86.61	**0395-1222-03-97**

Door support guide (for heavy doors with heavy equipment)

suitable for
Replacement doors - solid and Replacement doors – single doors for two-door cabinets

	Order No.
	0396-9009-00-00

häwa

Acrylic door for H390/H395 cabinets

Features
- Fit H390 and H395

Product Description
For cabinet dimensions H390/H395
With maxiviewing area for cabinets with one door.
Doors hinged on the right side.
Can be changed to left side.

- Ground connection: through angle connectors e.g. bolt M8x10

Technical Data
- Material: 14 ga steel
- Surface finish: Powder coated RAL 7035, door 14 ga steel, window 0.12“ Makrolon

Further technical information ➜ below

Scope of Delivery
- 1 acrylic door with latch and hinges 120°

suitable for width		suitable for height		Dimension HS		Dimension BS		**Order No.**
mm	inch	mm	inch	mm	inch	mm	inch	
600	23.62	1,600	62.99	1,429	56.26	457	17.99	**0396-0016-60-87**
600	23.62	1,800	70.87	1,629	64.13	457	17.99	**0396-0018-60-87**
600	23.62	2,000	78.74	1,829	72.01	457	17.99	**0396-0020-60-87**
600	23.62	2,200	86.61	2,029	79.88	457	17.99	**0396-0022-60-87**
800	31.5	1,600	62.99	1,429	56.26	657	25.87	**0396-0016-80-87**
800	31.5	1,800	70.87	1,629	64.13	657	25.87	**0396-0018-80-87**
800	31.5	2,000	78.74	1,829	72.01	657	25.87	**0396-0020-80-87**
800	31.5	2,200	86.61	2,029	79.88	657	25.87	**0396-0022-80-87**

Technical Information

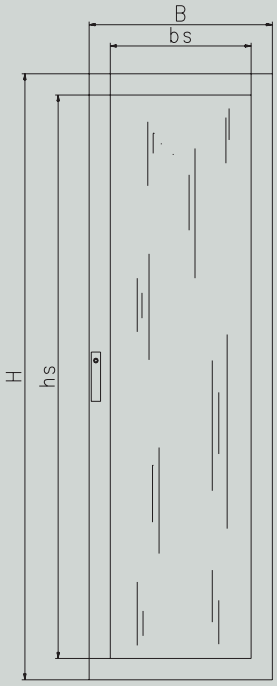

Half-door, top, width 600

Features
- For H390 und H395
- Standard: hinged on right side
- with window or solid

Technical Data
- Material: Sheet steel
- Surface finish: Powder coated RAL 7035

Note
For height 1600/1800/2000 mm: Only available with keyboard drawer H-150mm and half-door H-860 mm.

Dimension		Order No.	
mm	inch	**closed**	**with window door**
523	21,46	**0396-6052-20-07**	**0396-6052-20-17**
723	29,33	**0396-6072-20-07**	**0396-6072-20-17**
923	37,2	**0396-6092-20-07**	**0396-6092-20-17**

Keyboard drawer for width 600

Features
- Wooden palm rest
- for H390 and H395

Product Description
- Keyboard drawer, lockable
- Max. dimensions of keyboard L=500 x B=195 x H=55 mm
- With storage box and pull-out tray (approx. 275 mm)
- Pull-out mouse pad on both sides (approx 245 mm)

Technical Data
- Dimensions: 150 mm; 5.91 inch
- Material: Sheet steel
- Surface finish: Powder coated RAL 7035

	Order No.
	0396-6080-20-47

häwa

Partial bottom doors, width 600

Features
- For H390 und H395
- Standard: hinged on right side

Technical Data
- Material: Sheet steel
- Surface finish: Powder coated RAL 7035

Dimension		Order No.
mm	inch	**closed**
860	33,86	**0396-6086-20-37**

Drilling template

Features
- for Half-door

Product Description
Template with drill pattern for additional hinges and locks

Technical Data
- Material: 14 ga steel
- Surface finish: Galvanized

Order No.
3080-7218-00-02

Viewing cover

Product Description
For installation on housings and cabinets.
Protects indicators and instruments against unauthorized or unintentional access.
Lock: Lateral twist grip with locking barrel left side locking black plastic

Technical Data
Further technical information ➜ below

Scope of Delivery
- Viewing cover with lock, hinges and mounting hardware

Note
Other dimensions on request. For design with lock on right side, toggle 3070-7347-92-00 has to be ordered separately.
Viewing cover with hinge location 1 (viewing cover shorter than door)
Viewing cover with hinge location 2 (viewing cover hinges flush with door hinges)

Accessories
- Wing handle black, right locking ➜ page 113

Dimensions		Order No.	
		Hinge finish 1	Hinge finish 2
mm	inch		
548 x 213 x 55	21,57 x 8,39 x 2,17	0371-5521-55-10	0371-5521-55-20
548 x 346 x 55	21,57 x 13,62 x 2,17	0371-5535-55-10	0371-5535-55-20
548 x 479 x 55	21,57 x 18,86 x 2,17	0371-5547-55-10	0371-5547-55-20
548 x 613 x 55	21,57 x 24,13 x 2,17	0371-5561-55-10	0371-5561-55-20
589 x 350 x 55	23,19 x 13,78 x 2,17	0371-5935-55-10	0371-5935-55-20
589 x 560 x 55	23,19 x 22,05 x 2,17	0371-5956-55-10	0371-5956-55-20

Technical Information

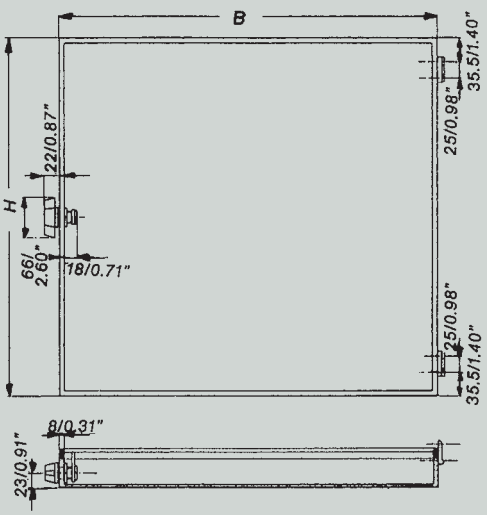

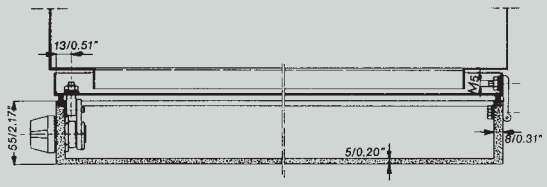

Viewing cover with hinge option 1
(Viewing cover hinge side smaller than cabinet door)

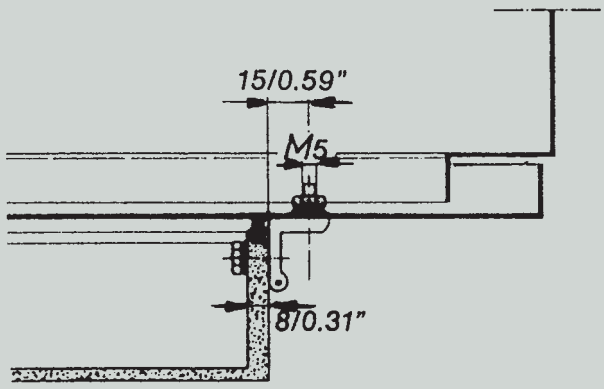

Viewing cover with hinge option 2
(Viewing cover hinge side must be aligned with cabinet frame or door)

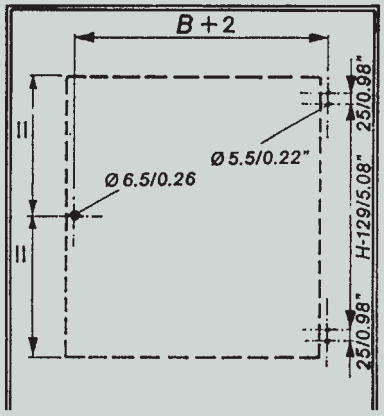

Mounting diagram Hinge finish 1

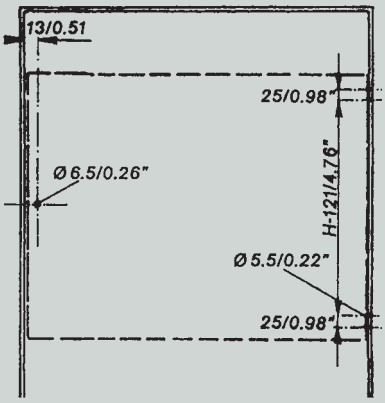

Mounting diagram Hinge finish 2

Accessories

Wing handle black, right locking Details ➜ **page 192**

	Description	Order No.
	locking of viewing covers type 0371 **Lock for right locking version** **For left locking installation: change orientation of latch** **90° quarter turn** **Key removable in both positions**	**3070-7347-92-00**

Monitor frame

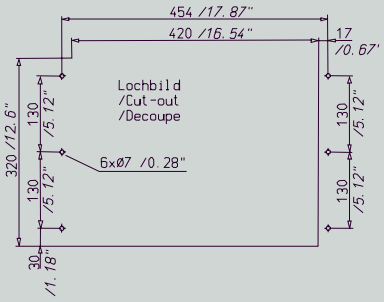

Product Description

For inclined monitor installation

To place monitor on an incline, two additional mounting rails are required for the intermediate shelf.

Technical Data

- Dimensions: 485 x 362 mm; 19.09 x 14.25 inch

Further technical information ➜ page below

Scope of Delivery

- 1 monitor frame with mounting hardware

Note

Design in stainless steel or other customization available with lead time; price on request. For tilting, please order rails 0396-7014-60-01 or 0396-7014-80-01 for cabinet depth 600 or 800 respectively.

Accessories

- Configuration rails ➜ page 114

	Order No.
	0346-4539-19-07

Technical Information

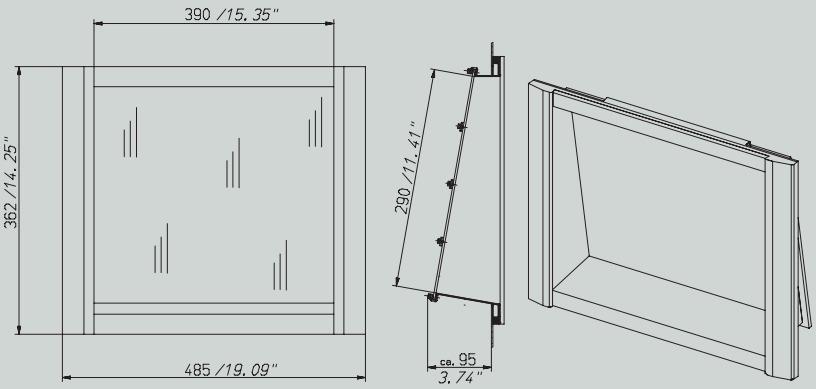

Accessories

Configuration rails Details ➜ **page 187**

suitable for depth		Order No.
mm	inch	
600	23.62	**0396-7014-60-00**
800	31.5	**0396-7014-80-00**

Monitor frame, flat design

Features
- Flat version
- aesthetic design

Product Description
- ideal for easy retrofits
- window and gasketing installed

Technical Data
- Dimensions: 450 x 355 mm; 17.72 x 13.98 inch
- Material: 18 ga sheet steel, Painted, RAL 7035

Further technical information ➜ below

Scope of Delivery
- Monitor frame complete with installed window and gasketing, mounting hardware enclosed

Order No.
0346-3727-19-02

Technical Information

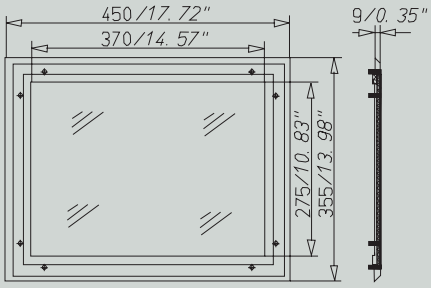

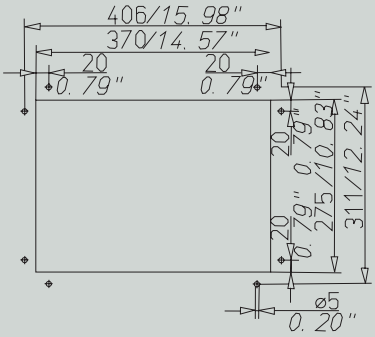

Keyboard tray

Product Description

For subsequent mounting of keyboards in cabinet doors or side panels
- Folds down slowly with adjustable friction slides
- Max. keyboard width 20.08“
- Integrated palm rest for ease of data entry
- Keyboard is secured by supplied Velcro strips or other methods such as screws or adhesive tape
- For door widths of 31.50“ or wider
- Lock: Twist lock with locking barrel and key, lock type 2233

Technical Data
- Material: 16 ga sheet steel

Scope of Delivery
- Keyboard tray, ready for installation

Order No.
0346-6236-09-07

häwa

Technical Information

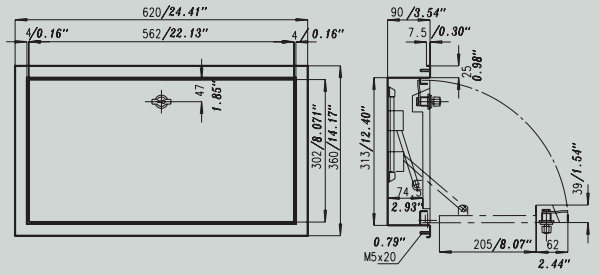

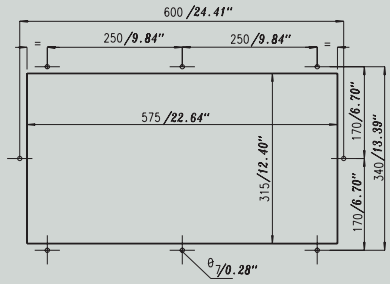

Mounting cut-out

Top panel bolts

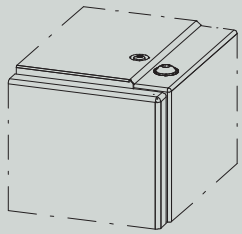

Product Description

Self-locking screw for use without washer

Technical Data

- M 12 x 20
- Surface finish: Galvanized and blue chrone-plated

Order No.
3003-9000-12-20

Spacer bolts for top panels

Product Description

They are needed when the top cable entry plate is raised for roof ventilation.

Technical Data

- Length 0.79"
- Surface finish: Galvanized and blue chrone-plated

Scope of Delivery

- 1 set = 8 pieces

Order No.
0396-7018-02-00

Top panels with rubber clambing

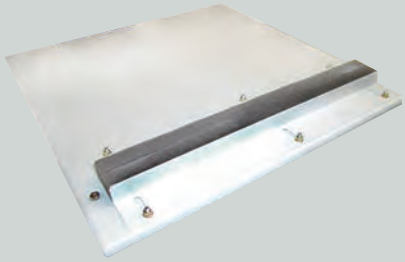

Features

- For easy cable entry into the cabinet

Product Description

Can be substituted for top plate or top cable entry plate. For easier cable entry into the cabinet.

Suitable for H390/H395/PC-cabinet 2096: W x D: 600 x 600 mm

Technical Data

- Material: 16 ga sheet steel
- Surface finish: Powder coated RAL 7035, Powder coated RAL 7035

Order No.
0396-7060-62-77

Top panels with brushes

Features
- For easy cable entry into the cabinet H390/H395

Product Description
The strip allows easy cable entry in cabinet and keeps dust out.

Suitable for H390/H395/PC-cabinet 2096: W x D: 600 x 600 mm

Technical Data
- Material: 16 ga sheet steel

	Order No.
	0396-7060-62-47

Bottom cable entry plates

Features
- Separation of cabinet floor plate (H390/H395)

Product Description
For cable entry for free-standing and modular cabinets

Technical Data
- Material: Sheet steel
- Surface finish: Galvanized

Scope of Delivery
- 1 set = 3 plates with mounting hardware and gasket

Note
Requires 2 set per cabinet. For 1000 mm wide cabinets 1 set each of 0396-4000-xx-03 and 0396-6000-xx-03 have to be combined.
Can only be used together with middle rail.

Accessories
- Middle Support bar ➜ page 117
- Rubber clamps for cable entry plates ➜ page 117

suitable for width		suitable for depth		Order No.
mm	inch	mm	inch	2 x
800	31.5	400	15.75	**0396-4000-40-03**
1,200	47.24	400	15.75	**0396-6000-40-03**
800	31.5	500	19.69	**0396-4000-50-03**
1,200	47.24	500	19.69	**0396-6000-50-03**
800	31.5	600	23.62	**0396-4000-60-03**
1,200	47.24	600	23.62	**0396-6000-60-03**
800	31.5	800	31.5	**0396-4000-80-03**
1,200	47.24	800	31.5	**0396-6000-80-03**

häwa

Accessories

Middle Support bar Details ➜ **page 142**

Description	suitable for depth mm	suitable for depth inch	Order No.
For width separation of 800, 1000, and 1200 mm wide cabinets	400	15.75	**0396-0007-40-00**
	500	19.69	**0396-0007-50-00**
	600	23.62	**0396-0007-60-00**
	800	31.5	**0396-0007-80-00**

Rubber clamps for cable entry plates Details ➜ **page 179**

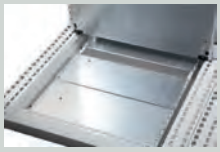

Description	length mm	length inch	suitable for width mm	suitable for width inch	Order No.
Divided cable entry plates permit cable entry without drilling of holes. Particularly suitable for same cable diameters.	395	15,55	600	23,62	**0396-7060-00-71**
	595	23,43	800	31,5	**0396-7080-00-71**
	795	31,3	1.000	39,37	**0396-7010-00-71**
	995	39,17	1.200	47,24	**0396-7012-00-71**

Side panel H375

Features
- For installation of outward side panels of modular cabinets H375

Technical Data
- Material: Stainless steel No. 1.4301
- Surface finish: Externally brushed

Further technical information ➜ below

Scope of Delivery
- 1 set of side panels with foamed rubber gasket and mounting hardware

Accessories
- Enhancement kits IP 56 for H395/H375 ➜ below

suitable for height		suitable for depth		Dimension HS		Dimension TS				Order No.
mm	inch	mm	inch	mm	inch	mm	inch	mm	inch	
1,600	62.99	400	15.75	1,596	62.83	350	13.78	350	13.78	**0376-7016-40-61**
1,800	70.87	400	15.75	1,796	70.71	350	13.78	350	13.78	**0376-7018-40-61**
2,000	78.74	400	15.75	1,996	78.58	350	13.78	350	13.78	**0376-7020-40-61**
1,600	62.99	500	19.69	1,596	62.83	450	17.72	450	17.72	**0376-7016-50-61**
1,800	70.87	500	19.69	1,796	70.71	450	17.72	450	17.72	**0376-7018-50-61**
2,000	78.74	500	19.69	1,996	78.58	450	17.72	450	17.72	**0376-7020-50-61**
1,800	70.87	600	23.62	1,796	70.71	550	21.65	550	21.65	**0376-7018-60-61**
2,000	78.74	600	23.62	1,996	78.58	550	21.65	550	21.65	**0376-7020-60-61**

Technical Information

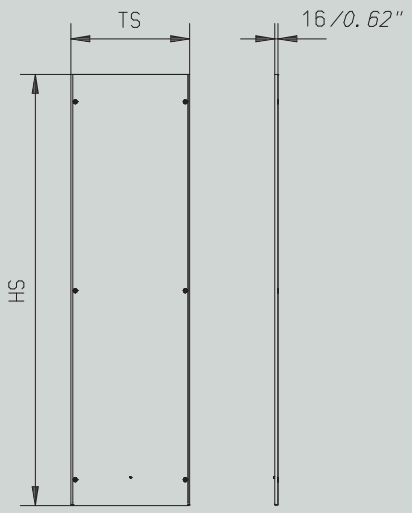

Accessories

Enhancement kits IP 56 for H395/H375 Details ➜ **page 174**

	Description	Order No.
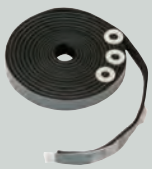	**Gasket 10x2 mm, self-adhesive, and sealing washers, 11 mm diameter, for additional sealing of side panels and fittings To increase IP rating from IP55 to IP56 for all H395 and H375 modular cabinets**	**0396-7056-01-00**

häwa

Bases height 3.94“

Features

- For free-standing single and ganged-together modular cabinets
- Rugged U-profiles
- High lifting capacity.

Product Description

Base for installation under cabinets.
For ganged-together modular H375 cabinets the side panels are not installed to get a continuous room for cable distribution.

Technical Data

- Material: Stainless steel No. 1.4301
- Surface finish: Externally brushed

Further technical information ➜ page below

Scope of Delivery

- Base complete, unassembled, with assembly and mounting hardware

Hole dimension (a)		suitable for width		suitable for depth		Dimension T		**Order No.**
mm	inch	mm	inch	mm	inch	mm	inch	
305	12.01	1,000	39.37	500	19.69	350	13.78	**0376-1001-50-11**
305	12.01	1,200	47.24	500	19.69	350	13.78	**0376-1201-50-11**
305	12.01	600	23.62	500	19.69	350	13.78	**0376-6001-50-11**
305	12.01	800	31.5	500	19.69	350	13.78	**0376-8001-50-11**
305	12.01	600	23.62	400	15.75	350	13.78	**0376-6001-40-11**
305	12.01	800	31.5	400	15.75	350	13.78	**0376-8001-40-11**
305	12.01	1,000	39.37	400	15.75	350	13.78	**0376-1001-40-11**
305	12.01	1,200	47.24	400	15.75	350	13.78	**0376-1201-40-11**
505	19.88	600	23.62	600	23.62	550	21.65	**0376-6001-60-11**
505	19.88	800	31.5	600	23.62	550	21.65	**0376-8001-60-11**
505	19.88	1,200	47.24	600	23.62	550	21.65	**0376-1201-60-11**

Technical Information

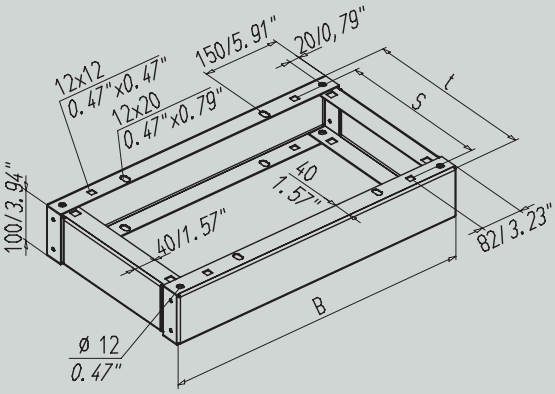

Bases height 3.94“

Product Description

Base for installation under cabinets. For ganged-together modular H375 cabinets the side panels are not installed to get a continuous room for cable distribution.

Technical Data

- Material: Stainless steel No. 1.4301
- Surface finish: Externally brushed

Further technical information ➜ below

Note

The back of the bases is flush with the cabinets.

Dimension S		suitable for width		suitable for depth		Dimension T		**Order No.**
mm	inch	mm	inch	mm	inch	mm	inch	
330	12.99	600	23.62	400	15.75	375	14.76	**0376-6001-41-11**
330	12.99	800	31.5	400	15.75	375	14.76	**0376-8001-41-11**
330	12.99	1,000	39.37	400	15.75	375	14.76	**0376-1001-41-11**
330	12.99	1,200	47.24	400	15.75	375	14.76	**0376-1201-41-11**
430	16.93	600	23.62	500	19.69	475	18.7	**0376-6001-51-11**
430	16.93	800	31.5	500	19.69	475	18.7	**0376-8001-51-11**
430	16.93	1,000	39.37	500	19.69	475	18.7	**0376-1001-51-11**
430	16.93	1,200	47.24	500	19.69	475	18.7	**0376-1201-51-11**
530	20.87	600	23.62	600	23.62	575	22.64	**0376-6001-61-11**
530	20.87	800	31.5	600	23.62	575	22.64	**0376-8001-61-11**
530	20.87	1,000	39.37	600	23.62	575	22.64	**0376-1001-61-11**
530	20.87	1,200	47.24	600	23.62	575	22.64	**0376-1201-61-11**

Technical Information

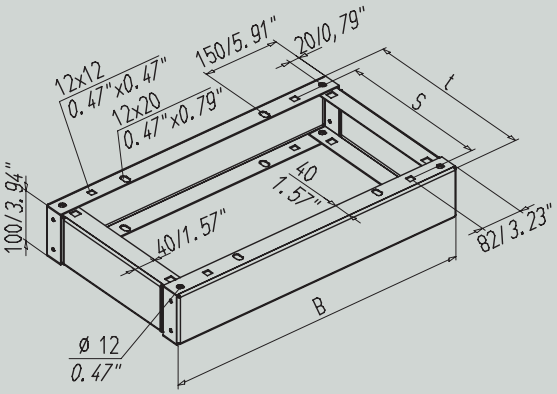

häwa

Bases height 7.87“

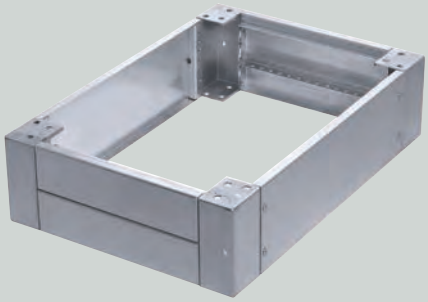

Features
- Quick and easy installation
- For free-standing single and ganged-together modular cabinets
- High lifting capacity.

Product Description
Base for installation under cabinets. For ganged-together modular H375 cabinets the side panels are not installed to get a continuous room for cable distribution.

Technical Data
- Surface finish: Powder coated RAL 7022

Further technical information ➜ page 122

Scope of Delivery
- Vertical panels and corner sections pre-assembled, with sides placed onto bolts and mounting hardware.

Note
Excellent accessibility. Cable support rails (see page 71) can be attached to the internal hole profile, provided on two levels. When cabinets are assembled in suites, the top and bottom sides of adjacent bases may be omitted to permit continuous cabling.

suitable for width		suitable for depth		Dimension T		**Order No.**
mm	inch	mm	inch	mm	inch	
600	23.62	400	15.75	350	13.78	**0376.6002.40.11**
800	31.5	400	15.75	350	13.78	**0376.8002.40.11**
1,000	39.37	400	15.75	350	13.78	**0376.1002.40.11**
1,200	47.24	400	15.75	350	13.78	**0376.1202.40.11**
600	23.62	500	19.69	450	17.72	**0376.6002.50.11**
800	31.5	500	19.69	450	17.72	**0376.8002.50.11**
1,000	39.37	500	19.69	450	17.72	**0376.1002.50.11**
1,200	47.24	500	19.69	450	17.72	**0376.1202.50.11**
600	23.62	600	23.62	550	21.65	**0376.6002.60.11**
800	31.5	600	23.62	550	21.65	**0376.8002.60.11**
1,200	47.24	600	23.62	550	21.65	**0376.1202.60.11**

Technical Information

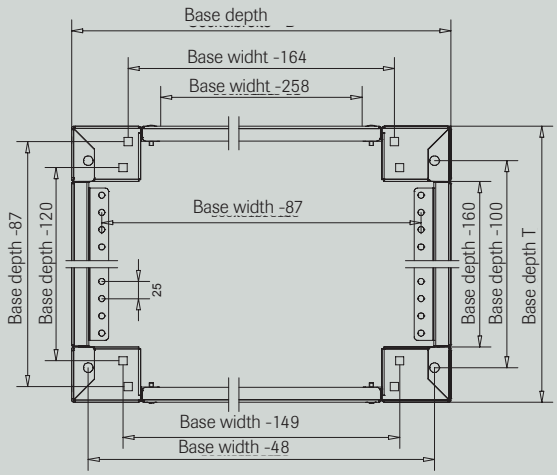

Accessories

3.94“ high vertical base panel Details ➜ **page 125**

	Description	suitable for width mm	suitable for width inch	Order No.
	Option for 7.87“ high vertical panels.	600	23.62	**0376-6002-01-01**
		800	31.5	**0376-8002-01-01**
		1,000	39.37	**0376-1002-01-01**
		1,200	47.24	**0376-1202-01-01**

Base lateral rail Details ➜ **page 126**

	Description	suitable for depth mm	suitable for depth inch	Order No.
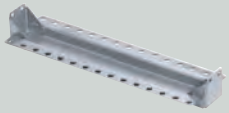	**Lateral rail for top/bottom assembly in 200 mm high bases Additional reinforcement for multiple base systems. Formation of assembly layers in bases.**	400	15.75	**0376-0000-40-01**
		500	19.69	**0376-0000-50-01**
		600	23.62	**0376-0000-60-01**
		800	31.5	**0376-0000-80-01**

Safety nut DIN 6923, M6 Details ➜ **page 184**

	Winding	Order No.
	M 6	**3005-9002-06-00**

Hexagon head screw DIN 933 Details ➜ **page 183**

	screw thread	Order No.
	M 6x12	**3005-9933-06-12**

häwa

Bases only for H370 Cabinet height 7.87“

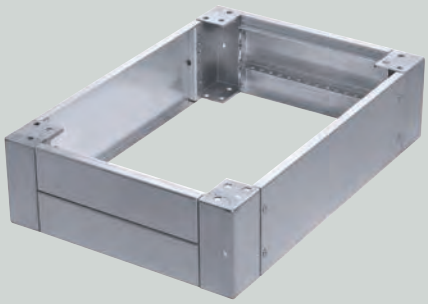

Features
- Quick and easy installation
- For free-standing single and ganged-together modular cabinets
- High lifting capacity.

Product Description
Base for installation under cabinets. For ganged-together modular H375 cabinets the side panels are not installed to get a continuous room for cable distribution.

Technical Data
Further technical information ➜ page 123

Scope of Delivery
- Corner pieces with front and back pieces pre-assembled and side pieces (1 packet each). Mounting hardware and installation instructions 0396-0000-01-77.

Accessories
- 3.94“ high vertical base panel ➜ page 124
- Base lateral rail 0376 ➜ page 124

suitable for width		suitable for depth		Dimension T		**Order No.**
mm	inch	mm	inch	mm	inch	
600	23.62	400	15.75	350	13.78	**0376.6002.41.11**
800	31.5	400	15.75	350	13.78	**0376.8002.41.11**
1,000	39.37	400	15.75	350	13.78	**0376.1002.41.11**
1,200	47.24	400	15.75	350	13.78	**0376.1202.41.11**
600	23.62	500	19.69	450	17.72	**0376.6002.51.11**
800	31.5	500	19.69	450	17.72	**0376.8002.51.11**
1,000	39.37	500	19.69	450	17.72	**0376.1002.51.11**
1,200	47.24	500	19.69	450	17.72	**0376.1202.51.11**
600	23.62	600	23.62	550	21.65	**0376.6002.61.11**
800	31.5	600	23.62	550	21.65	**0376.8002.61.11**
1,200	47.24	600	23.62	550	21.65	**0376.1002.61.11**
1,200	47.24	600	23.62	550	21.65	**0376.1202.61.11**

Technical Information

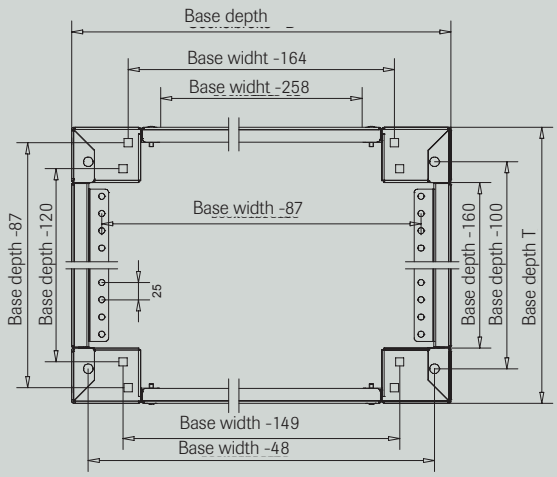

Accessories

3.94“ high vertical base panel Details ➜ **page 125**

Description	suitable for width mm	suitable for width inch	Order No.
Option for 7.87“ high vertical panels.	600	23.62	**0376-6002-01-01**
	800	31.5	**0376-8002-01-01**
	1,000	39.37	**0376-1002-01-01**
	1,200	47.24	**0376-1202-01-01**

Base lateral rail Details ➜ **page 126**

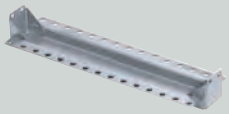

Description	suitable for depth mm	suitable for depth inch	Order No.
Lateral rail for top/bottom assembly in 200 mm high bases Additional reinforcement for multiple base systems. Formation of assembly layers in bases.	400	15.75	**0376-0000-40-01**
	500	19.69	**0376-0000-50-01**
	600	23.62	**0376-0000-60-01**
	800	31.5	**0376-0000-80-01**

Safety nut DIN 6923, M6 Details ➜ **page 184**

Winding	Order No.
M 6	**3005-9002-06-00**

Hexagon head screw DIN 933 Details ➜ **page 183**

screw thread	Order No.
M 6x12	**3005-9933-06-12**

häwa

3.94“ high vertical base panel

Features

- For extended operating range of the base H-200 mm

Product Description

Option for 7.87“ high vertical panels.

Technical Data

- Material: No. 1.4301, 16 ga, externally brushed
- Surface finish: Externally brushed

Scope of Delivery

- 2 vertical panels without mounting hardware

suitable for width		Order No.
mm	inch	
600	23.62	**0376-6002-01-01**
800	31.5	**0376-8002-01-01**
1,000	39.37	**0376-1002-01-01**
1,200	47.24	**0376-1202-01-01**

Technical Information

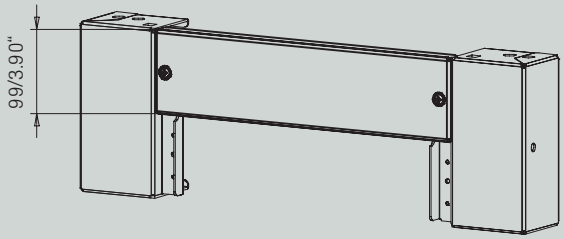

Base lateral rail

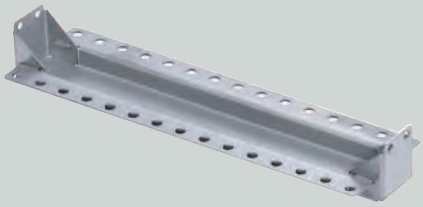

Features
- Additional reinforcement for multiple base systems.
- Formation of assembly layers in bases.

Product Description
Lateral rail for top/bottom assembly in 200 mm high bases

Technical Data
- Surface finish: Externally brushed

Scope of Delivery
- 1 set (2 pc.) lateral rail without mounting hardware

Accessories
- Hexagon head screw DIN 933 ➜ below
- Safety nut DIN 6923, M6 ➜ below

suitable for depth		Order No.
mm	inch	
400	15.75	**0376-0000-40-01**
500	19.69	**0376-0000-50-01**
600	23.62	**0376-0000-60-01**
800	31.5	**0376-0000-80-01**

Accessories

Safety nut DIN 6923, M6 Details ➜ **page 184**

Winding	Order No.
M 6	**3005-9002-06-00**

Hexagon head screw DIN 933 Details ➜ **page 183**

screw thread	Order No.
M 6x12	**3005-9933-06-12**

Top panel bolts

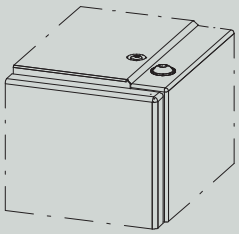

Order No.
3005-9000-12-25

häwa

Mounting plate

Features
- adjustable in depth
- häwa „click“

Technical Data
- Ground connection provided
- Material: Sheet steel
- Surface finish: Galvanized

Further technical information ➜ page 128

Scope of Delivery
- Mouning plate complete with mounting hardware

Note

For assembly in rearmost position attachment bracket 0396-0010-00-00/0012-00 or assembly connection set 0396-7032-01-43 should be used. For additional locking of mounting plates at lower attachment brackets or center attachment rails, please use hexagon head screws Verbus-Tensilock M8.

Accessories
- Hexagon head screw ➜ page 128
- Hex-nut ➜ page 128
- Center attachment ➜ page 128

Dimensions		Metal thickness Mounting plate		suitable for width		suitable for height		**Order No.**
mm	inch	mm	ga	mm	inch	mm	inch	
316 x 1,680	12.44 x 66.14			400	15.75	1,800	70.87	**0348-4018-00-13**
316 x 1,880	12.44 x 74.02			400	15.75	2,000	78.74	**0348-4020-00-13**
516 x 1,480	20.31 x 58.27	2.5	12	600	23.62	1,600	62.99	**0348-6016-00-13**
516 x 1,680	20.31 x 66.14	2.5	12	600	23.62	1,800	70.87	**0348-6018-00-13**
516 x 1,880	20.31 x 74.02	2.5	12	600	23.62	2,000	78.74	**0348-6020-00-13**
516 x 2,080	20.31 x 81.89	2.5	12	600	23.62	2,200	86.61	**0348-6022-00-13**
716 x 1,480	28.19 x 58.27	2.5	12	800	31.5	1,600	62.99	**0348-8016-00-13**
716 x 1,680	28.19 x 66.14	2.5	12	800	31.5	1,800	70.87	**0348-8018-00-13**
716 x 1,880	28.19 x 74.02	2.5	12	800	31.5	2,000	78.74	**0348-8020-00-13**
716 x 2,080	28.19 x 81.89	2.5	12	800	31.5	2,200	86.61	**0348-8022-00-13**
916 x 1,480	36.06 x 58.27	3	11	1,000	39.37	1,600	62.99	**0348-1016-00-13**
916 x 1,680	36.06 x 66.14	3	11	1,000	39.37	1,800	70.87	**0348-1018-00-13**
916 x 2,080	36.06 x 81.89	3	11	1,000	39.37	2,200	86.61	**0348-1022-00-13**
916 x 1,880	36.06 x 74.02	3	11	1,000	39.37	2,000	78.74	**0348-1020-00-13**
1,116 x 1,480	43.94 x 58.27	3	11	1,200	47.24	1,600	62.99	**0348-1216-00-13**
1,116 x 1,680	43.94 x 66.14	3	11	1,200	47.24	1,800	70.87	**0348-1218-00-13**
1,116 x 1,880	43.94 x 74.02	3	11	1,200	47.24	2,000	78.74	**0348-1220-00-13**
1,116 x 2,080	43.94 x 81.89	3	11	1,200	47.24	2,200	86.61	**0348-1222-00-13**
1,516 x 1,680	59.69 x 66.14	3	11	1,600	62.99	1,800	70.87	**0348-1618-00-13**
1,516 x 1,880	59.69 x 74.02	3	11	1,600	62.99	2,000	78.74	**0348-1620-00-13**
1,916 x 1,680	75.43 x 66.14	3	11	2,000	78.74	1,800	70.87	**0348-2018-00-13**
1,916 x 1,880	75.43 x 74.02	3	11	2,000	78.74	2,000	78.74	**0348-2020-00-13**

Mounting plate

Technical Information

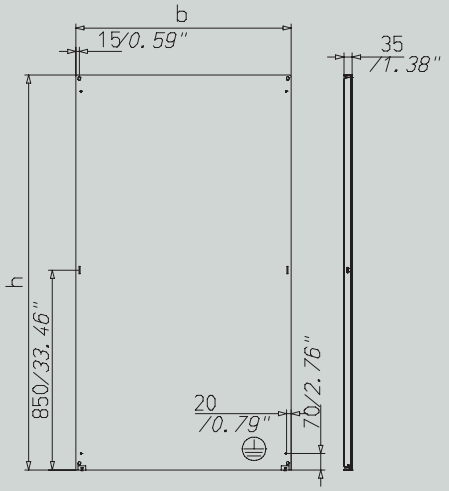

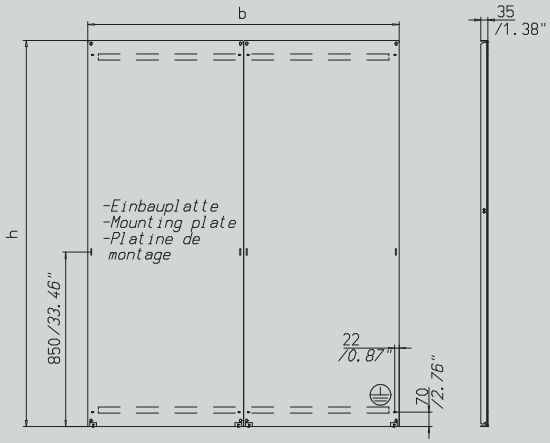

Accessories

Hexagon head screw Verbus-Tensilock Details ➜ **page 182**

screw thread	**Order No.**
M 8 x 16	**3003-9500-08-16**

Safety nut M8 Details ➜ **page 182**

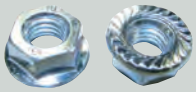

Winding	**Order No.**
M 8 x 16	**3003-9500-08-00**

Center attachment Details ➜ **page 140**

Description	Hole dimension (a)		length		suitable for depth		**Order No.**
	mm	inch	mm	inch	mm	inch	
For attachment of mounting plates, swing frames, partial mounting plates etc.	295	11.61	342	13.46	400	15.75	**0396-0003-40-05**
	395	15.55	442	17.4	500	19.69	**0396-0003-50-05**
	495	19.49	542	21.34	600	23.62	**0396-0003-60-05**
	695	27.36	742	29.21	800	31.5	**0396-0003-80-05**

Intermediate piece for mounting plate

Product Description

To maintain a continuous surface between modular cabinets assembled in suites.

Technical Data

- Material: 14 ga steel
- Surface finish: Galvanized

Further technical information ➜ page 129

Scope of Delivery

- Intermediate piece complete with mounting hardware

Note

For mounting plate in rearmost position, the cabinet rails can be used as intermediate plates.

Dimensions		suitable for height		**Order No.**
mm	inch	mm	inch	
1,481	58.31	1,600	62.99	**0348-0016-00-13**
1,681	66.18	1,800	70.87	**0348-0018-00-13**
1,881	74.06	2,000	78.74	**0348-0020-00-13**
2,081	81.93	2,200	86.61	**0348-0022-00-13**

Mounting plate

häwa

Technical Information

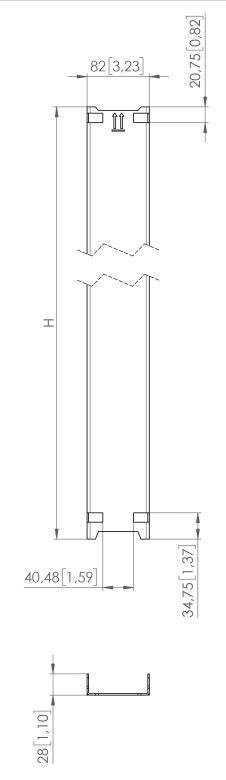

Attachment clip

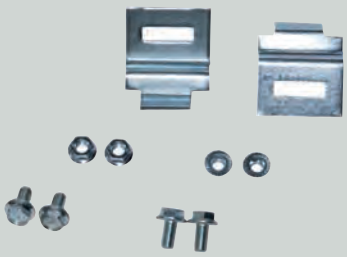

Product Description
For attachment of mounting plate to center attachment rails.

Note
Only for attachment to center attachment rails 0396-0003-xx-05 if mounting plate is installed in rearmost position (in-between cabinets rails).

	Order No.
	3080-7111-17-00

Lateral mounting plate

Product Description
- For the formation of mounting areas on the side.

Technical Data
- Material: 14 ga steel
- Surface finish: Galvanized

Further technical information ➜ below

Scope of Delivery
- Mounting plate without mounting hardware

Note
Attention: The vertical mounting rails are only required in H390 and H370 cabinets.

Accessories
- Vertical mounting rail ➜ below
- Tipping-cage nuts ➜ page 131

Dimensions		suitable for depth		Order No.
mm	inch	mm	inch	
320 x 200	12.6 x 7.87	400	15.75	**0396-3220-00-13**
320 x 400	12.6 x 15.75	400	15.75	**0396-3240-00-13**
420 x 200	16.54 x 7.87	500	19.69	**0396-4220-00-13**
420 x 400	16.54 x 15.75	500	19.69	**0396-4240-00-13**
520 x 200	20.47 x 7.87	600	23.62	**0396-5220-00-13**
520 x 400	20.47 x 15.75	600	23.62	**0396-5240-00-13**
720 x 200	28.35 x 7.87	800	31.5	**0396-7220-00-13**
720 x 400	28.35 x 15.75	800	31.5	**0396-7240-00-13**

Technical Information

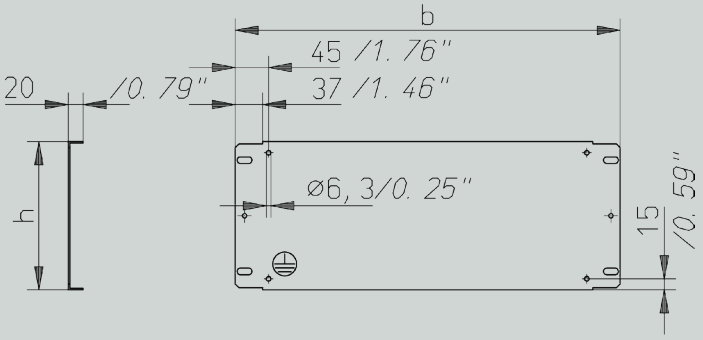

Accessories

Vertical assembly rail Details ➜ **page 132**

	Description	suitable for height		Order No.
		mm	inch	
	Increases versatility of H370/H390 cabinets **includes mounting hardware** **includes grounding bolt M8** **forms the vertical mounting platform for all accessories in the H370 and H390 cabinets**	1,600	62.99	**0391-9016-00-03**
		1,800	70.87	**0391-9018-00-03**
		2,000	78.74	**0391-9020-00-03**

Mounting plate

Hexagon head screw Verbus-Tensilock Details ➜ **page 182**

screw thread	Order No.
M 6 x 12	**0348-7500-06-12**
M 8 x 16	**3003-9500-08-16**

Tipping cage nuts Details ➜ **page 184**

Description		Order No.
Nuts can be inserted from the front. Tools are not required for mounting. Can be used for attaching all accessories to the perforated cabinet frame.	M 6	**2070-7202-06-00**
	M 8	**2070-7202-08-00**

Partial pivot mounting plate

Product Description

The partial mounting plate pivots to the front making the equioment behind the mounting plate readily accessible.

- Ground connection: Provided

Technical Data

- Material: 14 ga steel
- Surface finish: Galvanized

Further technical information ➜ below

Scope of Delivery

- 1 partial mounting plate with sliding block, 2 screws M8x16 and assembly instructions part-no. 0396-0055-00-77

Note

Attention: The vertical mounting rails are only required in H390 and H370 cabinets. Partial mounting plates can be installed either with center attachment brackets or center support rails. With the center support rails offering higher convenience. Please review the different attachment opportunities.

Accessories

- Vertical mounting rail ➜ page 132
- Center attachment ➜ page 132
- Center support bracket ➜ page 132

Dimensions		suitable for width		Order No.
mm	inch	mm	inch	
513 x 553	20.2 x 21.77	600	23.62	**0396-5155-00-03**
713 x 553	28.07 x 21.77	800	31.5	**0396-7155-00-03**
913 x 553	35.94 x 21.77	1,000	39.37	**0396-9155-00-03**
1,113 x 553	43.82 x 21.77	1,200	47.24	**0396-1155-00-03**

Technical Information

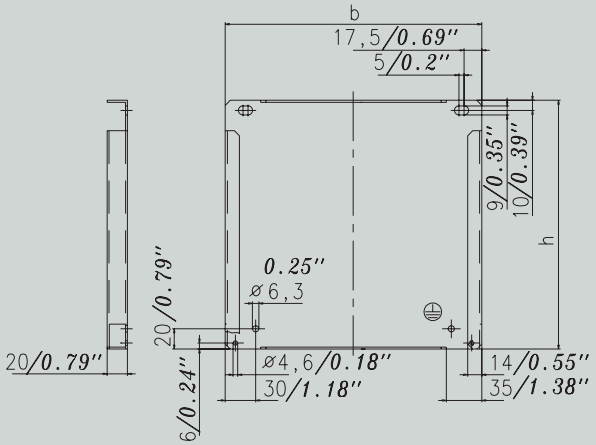

Accessories

Vertical assembly rail Details ➜ **below**

Description	suitable for height mm	suitable for height inch	Order No.
Increases versatility of H370/H390 cabinets includes mounting hardware includes grounding bolt M8, forms the vertical mounting platform for all accessories in the H370 and H390 cabinets	1,600	62.99	**0391-9016-00-03**
	1,800	70.87	**0391-9018-00-03**
	2,000	78.74	**0391-9020-00-03**

Center attachment Details ➜ **page 140**

Description	Hole dimension (a) mm	Hole dimension (a) inch	length mm	length inch	suitable for depth mm	suitable for depth inch	Order No.
For attachment of mounting plates, swing frames, partial mounting plates etc.	295	11.61	342	13.46	400	15.75	**0396-0003-40-05**
	395	15.55	442	17.4	500	19.69	**0396-0003-50-05**
	495	19.49	542	21.34	600	23.62	**0396-0003-60-05**
	695	27.36	742	29.21	800	31.5	**0396-0003-80-05**

Mounting kit for partial mounting plate to center attachment rails Details ➜ **page 185**

Order No.
3080-7111-92-06

Center support bracket Details ➜ **page 143**

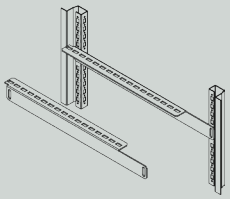

Description	Hole dimension (a) mm	Hole dimension (a) inch	length mm	length inch	suitable for depth mm	suitable for depth inch	Order No.
For mounting short 19“-rails, at any height of H390/H395 cabinets.	295	11.61	329	12.95	400	15.75	**0396-0015-40-01**
	395	15.55	429	16.89	500	19.69	**0396-0015-50-01**
	495	19.49	529	20.83	600	23.62	**0396-0015-60-01**
	695	27.36	729	28.7	800	31.5	**0396-0015-80-01**

Mounting brackets for mounting plate Details ➜ **page 185**

Order No.
3080-7111-91-06

Vertical assembly rail

Features
- Increases versatility of H370/H390 cabinets

Product Description
- includes mounting hardware
- includes grounding bolt M8
- forms the vertical mounting platform for all accessories in the H370 and H390 cabinets

Technical Data
- Material: 14 ga steel
- Surface finish: Galvanized

Scope of Delivery
- 1 set (1 x left, 1 x right) with mounting hardware

Note
For width 1600 / 2000 two sets of mounting rails in width 800 / 1000 have to be ordered respectively.

suitable for height mm	suitable for height inch	Order No.
1,600	62.99	**0391-9016-00-03**
1,800	70.87	**0391-9018-00-03**
2,000	78.74	**0391-9020-00-03**

häwa

Horizontal assembly rail

Features
- Increases versatility of H370/H390 cabinets

Technical Data
- Material: 14 ga steel
- Surface finish: Galvanized

Note
For width 1600 / 2000 two sets of mounting rails in width 800 / 1000 have to be ordered respectively.

suitable for width		Order No.
mm	inch	
600	23.62	**0391-9000-06-03**
800 (1600)	31.5	**0391-9000-08-03**
1,000	39.37	**0391-9000-10-03**
1,200	47.24	**0391-9000-12-03**

Lateral rail

Technical Data
- Material: 14 ga steel
- Surface finish: Galvanized

Further technical information ➜ below

Scope of Delivery
- 2 lateral rails without mounting hardware

Note
Attention: The vertical mounting rails are only required in H390 and H370 cabinets.

Accessories
- Tipping-cage nuts ➜ page 134
- Vertical mounting rail ➜ page 134

suitable for depth		Order No.
mm	inch	
400	15.75	**0396-0001-40-00**
500	19.69	**0396-0001-50-00**
600	23.62	**0396-0001-60-00**
800	31.5	**0396-0001-80-00**

Technical Information

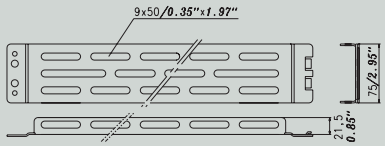

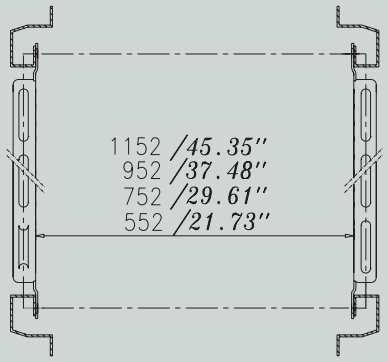

Accessories

Tipping cage nuts Details ➜ **page 184**

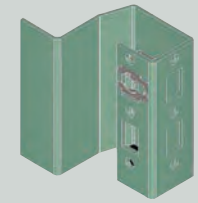

Description		Order No.
Nuts can be inserted from the front. Tools are not required for mounting. Can be used for attaching all accessories to the perforated cabinet frame.	M 8	**2070-7202-08-00**

Hexagon head screw Verbus-Tensilock Details ➜ **page 182**

screw thread	Order No.
M 8 x 16	**3003-9500-08-16**

Vertical assembly rail Details ➜ **page 132**

Description	suitable for height mm	suitable for height inch	Order No.
Increases versatility of H370/H390 cabinets includes mounting hardware	1,600	62.99	**0391-9016-00-03**
	1,800	70.87	**0391-9018-00-03**
	2,000	78.74	**0391-9020-00-03**

Mounting rail

Technical Data
- Material: 14 ga steel
- Surface finish: Galvanized

Further technical information ➜ below

Scope of Delivery
- 1 mounting rail without mounting hardware

Note
Support rails are installed horizontally or vertically to the lateral rails.

Accessories
- Clip-nuts ➜ below
- Lateral rail ➜ page 133

length mm	length inch	suitable for width mm	suitable for width inch	Order No.
549	21.61	600	23.62	**0396-0002-60-00**
749	29.49	800	31.5	**0396-0002-80-00**
949	37.36	1,000	39.37	**0396-0002-10-00**
1,149	45.24	1,200	47.24	**0396-0002-12-00**

Technical Information

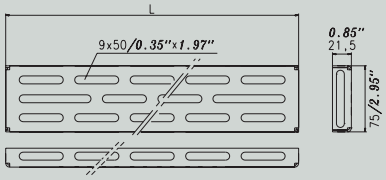

Accessories

Clip-nuts Details ➜ **page 168**

	Order No.
M 6	**2070-9102-36-02**

häwa

Support rail (T)

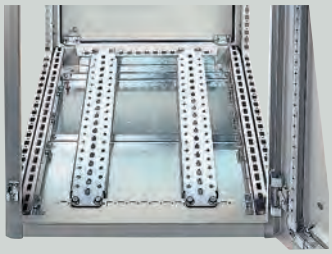

Product Description
For attachment of heavy equipment

Technical Data
- Material: 8 ga sheet steel
- Surface finish: Galvanized

Further technical information ➜ below

Scope of Delivery
- 2 support rails (T) with 4 x countersunk screws M8x16. Tipping cage nuts, nuts and screws M8x16 must be ordered separately

Accessories
- Tipping-cage nuts ➜ below
- Horizontal mounting rail ➜ below

Hole dimension (a)		suitable for depth		Order No.
mm	inch	mm	inch	
295	11.61	400	15.75	**0396-0004-40-00**
395	15.55	500	19.69	**0396-0004-50-00**
495	19.49	600	23.62	**0396-0004-60-00**
695	27.36	800	31.5	**0396-0004-80-00**

Technical Information

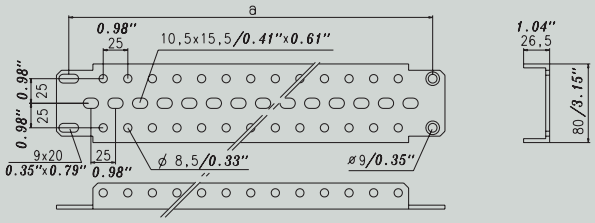

Accessories

Tipping cage nuts Details ➜ **page 184**

	Description		Order No.
	Nuts can be inserted from the front. **Tools are not required for mounting.** **Can be used for attaching all accessories to the perforated cabinet frame.**	M 8	**2070-7202-08-00**

Hexagon head screw Verbus-Tensilock Details ➜ **page 182**

	screw thread	Order No.
	M 6 x 12	**0348-7500-06-12**

Horizontal mounting rail Details ➜ **page 132**

	Description	suitable for height		Art. Nr.
		mm	inch	
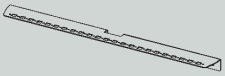	**Increases versatility of H370/H390 cabinets includes mounting hardware**	600	23,62	**0391-9000-06-03**
		800 (1600)	31,5	**0391-9000-08-03**
		1.000 (2000)	39,37	**0391-9000-10-03**
		1.200	47,24	**0391-9000-12-03**

Support rail(Q)

Product Description

For attachment of heavy equipment

Technical Data

- Material: 8 ga sheet steel
- Surface finish: Galvanized

Further technical information ➜ below

Scope of Delivery

- 1 support rail (Q) without mounting hardware

Accessories

- Support rail ➜ below
- Tipping-cage nuts ➜ below
- Vertical mounting rail ➜ below
- Hexagon head screw Verbus-Tensilock ➜ page 137

Hole dimension (a)		suitable for width		Order No.
mm	inch	mm	inch	
575	22.64	600	23.62	**0396-0005-60-00**
775	30.51	800	31.5	**0396-0005-80-00**
975	38.39	1,000	39.37	**0396-0005-10-00**
1,175	46.26	1,200	47.24	**0396-0005-12-00**

Technical Information

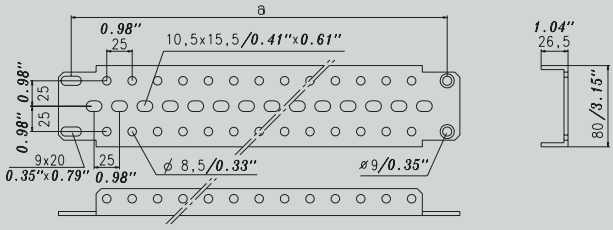

Accessories

Support rail (T) Details ➜ **page 135**

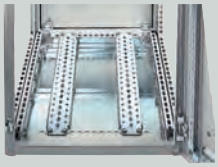

Description	Hole dimension (a)		suitable for depth		Order No.
	mm	inch	mm	inch	
For attachment of heavy equipment	295	11.61	400	15.75	**0396-0004-40-00**
	395	15.55	500	19.69	**0396-0004-50-00**
	495	19.49	600	23.62	**0396-0004-60-00**
	695	27.36	800	31.5	**0396-0004-80-00**

Tipping cage nuts Details ➜ **page 184**

Description		Order No.
Nuts can be inserted from the front. Tools are not required for mounting.	M 8	**2070-7202-08-00**

Vertical assembly rail Details ➜ **page 132**

Description	suitable for height		Order No.
	mm	inch	
Increases versatility of H370/H390 cabinets includes mounting hardware	1,600	62.99	**0391-9016-00-03**
	1,800	70.87	**0391-9018-00-03**
	2,000	78.74	**0391-9020-00-03**

häwa

Hexagon head screw Verbus-Tenislock Details ➜ **page 182**

screw thread	Order No.
M8x16	**3003-9500-08-16**

Support rail (Q1)

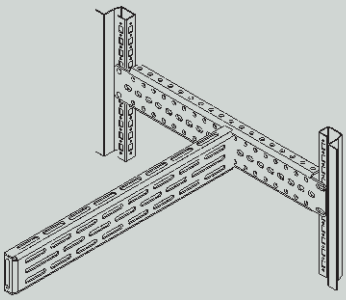

Product Description

For installation between support rails (T)

Technical Data

- Material: 11 ga sheet steel
- Surface finish: Galvanized

Further technical information ➜ below

Scope of Delivery

- 1 mounting rail without mounting hardware

Accessories

- Vertical mounting rail ➜ page
- Support rail ➜ below

length		suitable for width		Order No.
mm	inch	mm	inch	
542	21.34	600	23.62	**0396-0019-60-00**
742	29.21	800	31.5	**0396-0019-80-00**
942	37.09	1,000	39.37	**0396-0019-10-00**
1,142	44.96	1,200	47.24	**0396-0019-12-00**

Technical Information

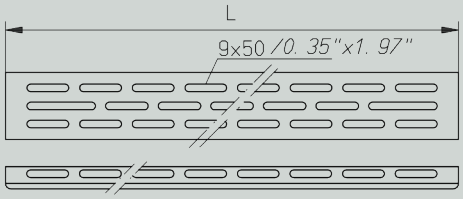

Hexagon head screw Verbus-Tensilock Details ➜ **page 182**

screw thread	Order No.
M8x16	**3003-9500-08-16**

Hex-nut Verbus-Tensilock Details ➜ **page 183**

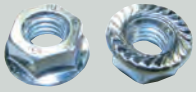

Description	Winding	Order No.
self-locking nuts for use without washer	M 8	**3003-9500-08-00**

Support rail (T) Details ➜ **page 135**

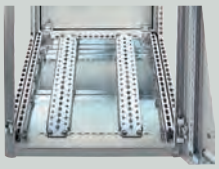

Description	Hole dimension (a)		suitable for depth		Order No.
	mm	inch	mm	inch	
For attachment of heavy equipment	295	11.61	400	15.75	**0396-0004-40-00**
	395	15.55	500	19.69	**0396-0004-50-00**
	495	19.49	600	23.62	**0396-0004-60-00**
	695	27.36	800	31.5	**0396-0004-80-00**

Support rail

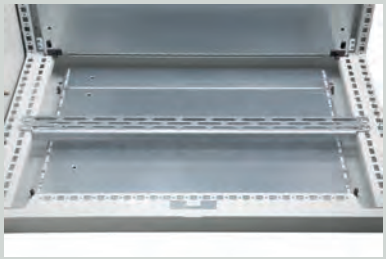

Product Description
For the attachment and support of heavy equipment (e.g. transformers) to the cabinet base

Technical Data
- Material: 11 ga sheet steel
- Surface finish: Galvanized

Further technical information ➜ below

Scope of Delivery
- 1 support rail without mounting hardware

Accessories
- Clip-nuts ➜ below

length		suitable for width		Order No.
mm	inch	mm	inch	
518	20.39	600	23.62	**0396-0062-06-00**
718	28.27	800	31.5	**0396-0062-08-00**
918	36.14	1,000	39.37	**0396-0062-10-00**
1,118	44.02	1,200	47.24	**0396-0062-12-00**

Technical Information

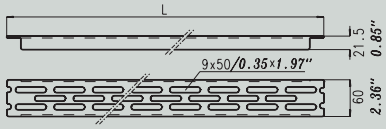

Accessories

Clip-nuts Details ➜ **page 168**

	Order No.
M 6	**2070-9102-46-03**

Hexagon head screw Verbus-Tensilock Details ➜ **page 182**

screw tread	Order No.
M 6 x 12	**0348-7500-06-12**

häwa

Strut

Features
- For lateral mounting to cabinet frame H375/ H395

Product Description
For lateral mounting of lightweight equipment, cable ducts, cable harnesses etc. inside the cabinet. With 4.5 mm holes every 25 mm for screws DIN 7500 M5x12 or DIN7516 M5x10.

Technical Data
- Surface finish: Galvanized

Further technical information ➜ below

Scope of Delivery
- 1 strut without mounting hardware

Note
The vertical mounting rails are only required in H370 and H390 cabinets.

Accessories
- Tipping-cage nuts ➜ below
- Vertical mounting rail ➜ below
- Hexagon head screw Verbus-Tensilock ➜ below

length		suitable for depth		Order No.
mm	inch	mm	inch	
316.5	12.46	400	15.75	**0396-0006-40-00**
416.5	16.4	500	19.69	**0396-0006-50-00**
516.5	20.33	600	23.62	**0396-0006-60-00**
715	28.15	800	31.5	**0396-0006-80-00**

Technical Information

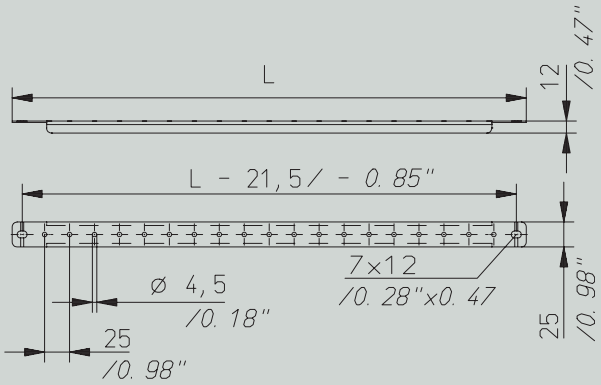

Accessories

Tipping cage nuts Details ➜ **page 184**

Description		Order No.
Nuts can be inserted from the front. Tools are not required for mounting.	M 6	**2070-7202-06-00**

Vertical assembly rail Details ➜ **page 132**

Description	suitable for height		Order No.
	mm	inch	
Increases versatility of H370/H390 cabinets includes mounting hardware	1,600	62.99	**0391-9016-00-03**
	1,800	70.87	**0391-9018-00-03**
	2,000	78.74	**0391-9020-00-03**

Hexagon heas screw Verbus-Tensilock Details ➜ **page 182**

screw tread	Order No.
M 5 x 12	**0348-7500-05-12**
M 6 x 12	**0348-7500-06-12**

Attachment bar for interior side of doors

Product Description
For mounting cable ducts, covers etc.
With Ø 0.177“ holes every 0.98“ to DIN-standards.

Technical Data
- Material: 16 ga sheet steel
- Surface finish: Galvanized

Further technical information ➜ below

Scope of Delivery
- 1 set (2 pc.) incl. 4 pc. Screws Gefu M5x12 and assembly instructions part-no. 0396-0003-00-77

Accessories
- Self-tapping screw 5x10 ➜ below

length		suitable for width		Order No.
mm	inch	mm	inch	
487	19.17	600	23.62	**0396-0011-60-00**
687	27.05	800	31.5	**0396-0011-80-00**
287	11.3	800	31.5	**0396-0011-82-00** [2)]
887	34.92	1,000	39.37	**0396-0011-10-00**

[2)] two doors

Technical Information

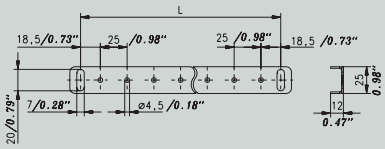

Accessories

Self-tapping screw 5x10 Details ➜ **page 182**

Description		Order No.
self-tapping	M 5 x 10	**3011-9010-75-16**

Center attachment

Product Description
For attachment of mounting plates, swing frames, partial mounting plates etc.

Technical Data
- Material: 14 ga steel
- Surface finish: Galvanized

Further technical information ➜ page 141

Scope of Delivery
- 1 center attachment without mounting hardware

Accessories
- Vertical mounting rail ➜ page 141

Hole dimension (a)		length		suitable for depth		Order No.
mm	inch	mm	inch	mm	inch	
295	11.61	342	13.46	400	15.75	**0396-0003-40-05**
395	15.55	442	17.4	500	19.69	**0396-0003-50-05**
495	19.49	542	21.34	600	23.62	**0396-0003-60-05**
695	27.36	742	29.21	800	31.5	**0396-0003-80-05**

häwa

Technical Information

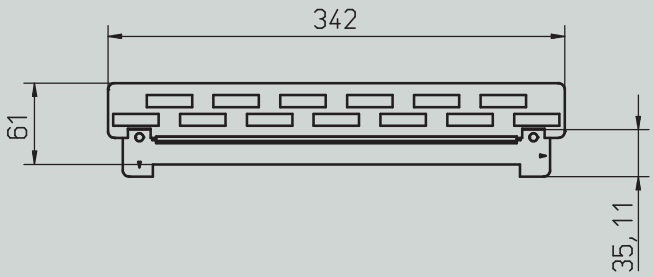

Accessories

Vertical assembly rail Details ➜ page 132

Description	suitable for height mm	suitable for height inch	Order No.
Increases versatility of H370/H390 cabinets includes mounting hardware	1,600	62.99	**0391-9016-00-03**
	1,800	70.87	**0391-9018-00-03**
	2,000	78.74	**0391-9020-00-03**

Center attachment for H370/H390

Product Description

For direct mounting to the side panel (without rail)

Technical Data

- Material: 14 ga steel
- Surface finish: Galvanized

Further technical information ➜ page [[1664.TI]]

Scope of Delivery

- 1 set = 2 pcs. without mounting hardware

Accessories

- Hex-nut Verbus-Tensilock ➜ page 146

length mm	length inch	Order No.
353	13.9	**0391-0003-40-00**
453	17.83	**0391-0003-50-00**
553	21.77	**0391-0003-60-00**

Accessories

Hex-nuts M6 Details ➜ **page 183**

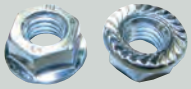

Description	Order No.
Self-locking nuts for use without washer	**3003-9500-08-00**

Middle Support bar

Product Description
For width separation of 800, 1000, and 1200 mm wide cabinets

Scope of Delivery
- 1 set = 1 x upper / 1 x lower middle support bar incl. support plates, 4 pc. flat head screw M8x16 (lower) and assembly instructions 0396-0007-00-77

Note
The accessories for 600 mm wide (cable support rail, support rail, EMI/RFI shield rail) can be installed in top or bottom. 2 pieces of the bottom cable entry plates are required.
Use of assembly bracket 0396-0007-00-90 allows for installation of mounting plate in rear-most position in-between cabinet rails.

Accessories
- Tipping-cage nuts ➜ below
- Bottom cable entry plates ➜ below

suitable for depth		Order No.
mm	inch	
400	15.75	**0396-0007-40-00**
500	19.69	**0396-0007-50-00**
600	23.62	**0396-0007-60-00**
800	31.5	**0396-0007-80-00**

Accessories

Tipping cage nuts Details ➜ **page 184**

	Description		Order No.
	Nuts can be inserted from the front. **Tools are not required for mounting.**	M 8	**2070-7202-08-00**

Bottom cable entry plates Details ➜ **page 116**

	Description	suitable for width		suitable for depth		Order No.
		mm	inch	mm	inch	
	For cable entry for free-standing and modular cabinets **Separation of cabinet floor plate (H390/H395)**	800	31.5	400	15.75	**0396-4000-40-03**
		1,200	47.24	400	15.75	**0396-6000-40-03**
		800	31.5	500	19.69	**0396-4000-50-03**
		1,200	47.24	500	19.69	**0396-6000-50-03**
		800	31.5	600	23.62	**0396-4000-60-03**
		1,200	47.24	600	23.62	**0396-6000-60-03**
		800	31.5	800	31.5	**0396-4000-80-03**
		1,200	47.24	800	31.5	**0396-6000-80-03**

häwa

Adjustment bracket

Features
- Maximum depth utilization for H375 / H395
- additional depth of 25 mm

Product Description
The adjustment brackets allow for installation of the mounting plate in the rear-most position

	Order No.
	0396-0007-00-90

Center support bracket

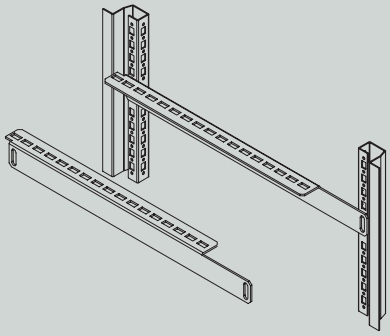

Product Description
For mounting short 19"-rails, at any height of H390/H395 cabinets.

Technical Data
- Material: 11 ga sheet steel
- Surface finish: Galvanized

Further technical information ➜ below

Scope of Delivery
- 1 pair support brackets without mounting hardware

Note
The vertical mounting rails are only required in H370 and H390 cabinets.

Accessories
- Tipping-cage nuts ➜ below
- Vertical mounting rail ➜ below
- Hexagon head screw Verbus-Tensilock ➜ page144

Hole dimension (a)		length		suitable for depth		Order No.
mm	inch	mm	inch	mm	inch	
295	11.61	329	12.95	400	15.75	**0396-0015-40-01**
395	15.55	429	16.89	500	19.69	**0396-0015-50-01**
495	19.49	529	20.83	600	23.62	**0396-0015-60-01**
695	27.36	729	28.7	800	31.5	**0396-0015-80-01**

Technical Information

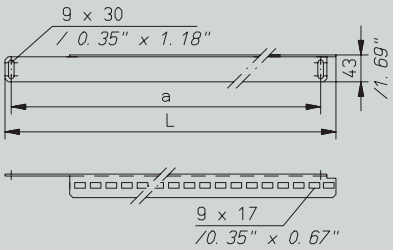

Accessories

Tipping cage nuts Details ➜ **page 184**

	Description		Order No.
	Nuts can be inserted from the front. Tools are not required for mounting.	M 8	**2070-7202-08-00**

Vertical assembly rail Details ➜ **page 132**

	Description	suitable for height		Order No.
		mm	inch	
	Increases versatility of H370/H390 cabinets includes mounting hardware	1,600	62.99	**0391-9016-00-03**
		1,800	70.87	**0391-9018-00-03**
		2,000	78.74	**0391-9020-00-03**

Hexagon head screw Verbus-Tensilock Details ➜ **page 182**

screw thread	Order No.
M 8 x 16	**0348-7500-08-16**

Adaptor rail for Lütze wiring system

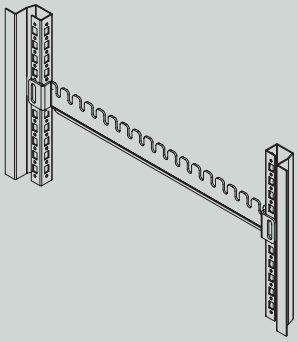

Technical Data
- Material: 11 ga sheet steel
- Surface finish: Galvanized

Further technical information ➜ below

Scope of Delivery
- 1 adaptor rail without mounting hardware

Note
Attention: The vertical mounting rails are only required in H390 and H370 cabinets.

Accessories
- Tipping-cage nuts ➜ below
- Vertical mounting rail ➜ page 145
- Hexagon head screw Verbus-Tensilock ➜ below

Hole dimension (a)		length		suitable for depth		Order No.
mm	inch	mm	inch	mm	inch	
295	11.61	315	12.4	400	15.75	**0396-0009-40-00**
395	15.55	415	16.34	500	19.69	**0396-0009-50-00**
495	19.49	515	20.28	600	23.62	**0396-0009-60-00**
695	27.36	715	28.15	800	31.5	**0396-0009-80-00**

Technical Information

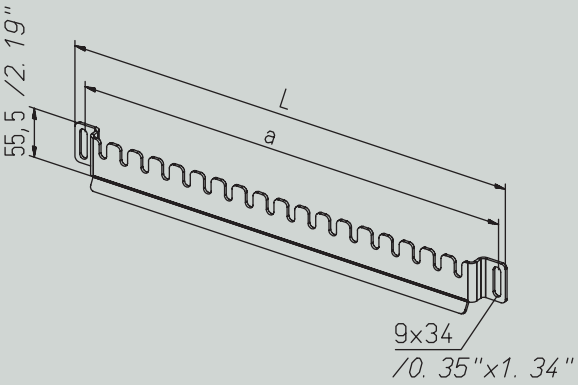

Accessories

Tipping cage nuts Details ➜ **page 184**

Description		Order No.
Nuts can be inserted from the front. Tools are not required for mounting.	M 8	**2070-7202-08-00**

Hexagon head screw Verbus-Tensilock Details ➜ **page 182**

screw thread	Order No.
M 8 x 16	**0348-7500-08-16**

häwa

Vertical assembly rail Details ➜ **page 132**

Description	suitable for height mm	suitable for height inch	Order No.
Increases versatility of H370/H390 cabinets includes mounting hardware	1,600	62.99	**0391-9016-00-03**
	1,800	70.87	**0391-9018-00-03**
	2,000	78.74	**0391-9020-00-03**

Cable support rail

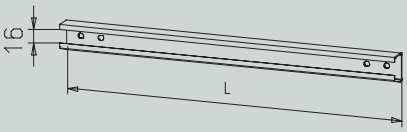

Product Description
For cabinets and 7.87“ high bases
Cable support rails for stress relief of cable wires.

Technical Data
- Surface finish: C-rail 1.38 x 0.71 x 0.08“ fire-galvanized

Further technical information ➜ below

Scope of Delivery
- 1 rail without mounting hardware

Note
For H390 W-62.99“ and W-78.74“ 2 rails W-31.50 or W-39.37“ as well as 2 sets attachment brackets are to be ordered. Furthermore, the rail can be bolted with tapping screws in the base directly onto the corner sections which corresponds to the rear position of the mounting plate in the cabinet!

Accessories
- Hexagon head screw Verbus-Tensilock ➜ page 146
- Hex-nut Verbus-Tensilock ➜ page 146
- Mounting brackets for cable support rail ➜ page 146
- Self-tapping screw 5x10 ➜ page 146

length mm	length inch	suitable for width mm	suitable for width inch	Order No.
264	10.39	400	15.75	**0396-7082-02-64**
464	18.27	600	23.62	**0396-7082-04-64**
664	26.14	800	31.5	**0396-7082-06-64**
714	28.11	850	33.46	**0396-7082-07-14**
864	34.02	1,000	39.37	**0396-7082-08-64**
964	37.95	1,100	43.31	**0396-7082-09-64**
1,064	41.89	1,200	47.24	**0396-7082-10-64**

Technical Information

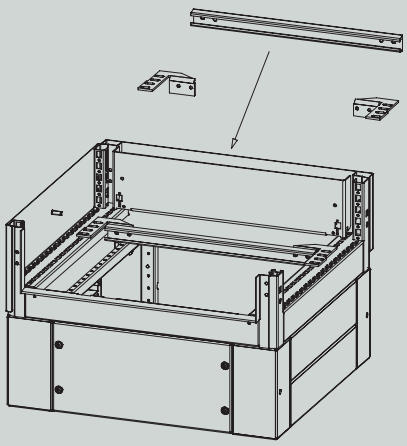

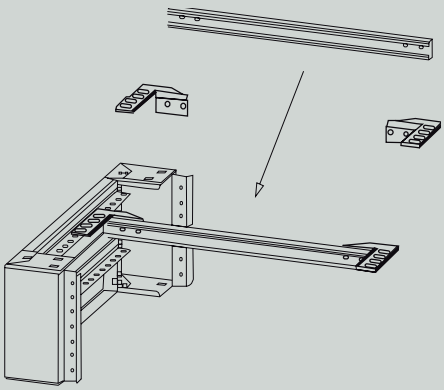

or fastening to mounting bracket

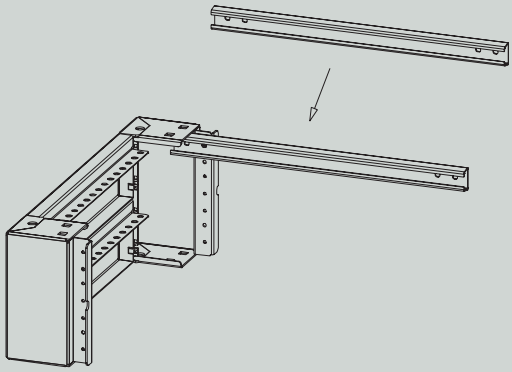

or fastening to mounting bracket

Accessories

Self-tapping screw 5x10 Details ➜ **page 182**

	Description		Order No.
	self-tapping	M 5 x 10	**3011-9010-75-16**

Hexagon head screw Verbus-Tensilock Details ➜ **page 182**

		Order No.
	M 6 x 12	**0348-7500-06-12**

Hex-nut Verbus-Tensilock Details ➜ **page 183**

	Beschreibung	Winding	Order No.
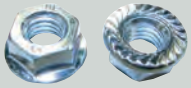	**or fastening to mounting bracket**	M 6	**3003-9500-06-00**

Mounting brackets for cable support rail Details ➜ **page 187**

	Description	Order No.
	Flexible mounting of cable support rails in cabinet or 200 mm high base.	**0396-7082-00-03**

Attachment rail

Technical Data
- 0.87 kg/m
- with pre-punched holes over entire length of rail

Further technical information ➜ page 147

Scope of Delivery
- 1 rail

Accessories
- Attachment brackets 3062 ➜ page 147

length		suitable for height		Order No.
mm	inch	mm	inch	
1,080	42.52	1,200	47.24	**0362-0101-10-80**
1,480	58.27	1,600	62.99	**0362-0101-14-80**
1,680	66.14	1,800	70.87	**0362-0101-16-80**
1,880	74.02	2,000	78.74	**0362-0101-18-80**

häwa

Technical Information

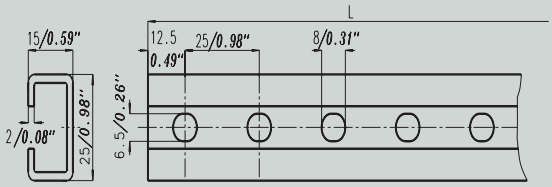

Accessories

Attachment brackets 3062 Details ➜ **page 186**

	Description	Order No.
	For C-rail mounting **For mounting the attachment rail 0362 to the cabinet frame**	**3062-7005-46-03**

Mounting rail 0362

Technical Data
- 0,9 kg/m

Further technical information ➜ below

Scope of Delivery
- 1 rail

Accessories
- Mounting screw ➜ below
- Slides 3061 ➜ below
- Slides 3062 ➜ below

length		suitable for width		Order No.
mm	inch	mm	inch	
513	20.2	600	23.62	**0362-0202-05-13**
713	28.07	800	31.5	**0362-0202-07-13**
913	35.94	1,000	39.37	**0362-0202-09-13**
1,113	43.82	1,200	47.24	**0362-0202-11-13**

Technical Information

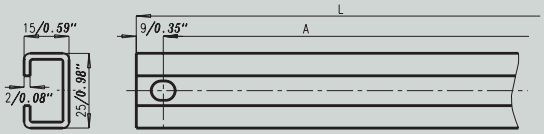

Accessories

Mounting screw Details ➜ **page 183**

	Description		Order No.
	M 6x14 DIN 84	M 6 x 14	**3055-9084-06-14**

Slides 3061 Details ➜ **page 186**

	Description		Order No.
	Material: Plastic (Polyamide) with threaded steel insert	M 6	**3061-9012-06-00**

Slides 3062 Details ➜ **page 186**

		Order No.
	M 6	**3062-9113-06-00**
	M 6	**3062-9112-06-00**

Support rail

Technical Data
- DIN EN 50035-G32 0,75 kg/m

Further technical information ➜ below

Scope of Delivery
- 1 rail

Accessories
- Mounting screw ➜ below
- Slides 3061 ➜ below
- Slides 3062 ➜ below

length		suitable for width		Order No.
mm	inch	mm	inch	
513	20.2	600	23.62	**0362-0302-05-13**
713	28.07	800	31.5	**0362-0302-07-13**
913	35.94	1,000	39.37	**0362-0302-09-13**
1,113	43.82	1,200	47.24	**0362-0302-11-13**

Technical Information

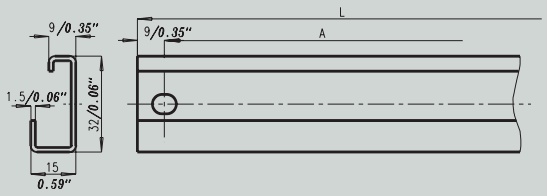

Accessories

Mounting screw Details ➜ **page 183**

	Description		Order No.
	M 6x14 DIN 84	M 6 x 14	**3055-9084-06-14**

Slides 3061 Details ➜ **page 186**

	Description		Order No.
	Material: Plastic (Polyamide) with threaded steel insert	M 6	**3061-9012-06-00**

Slides 3062 Details ➜ **page 186**

		Order No.
	M 6	**3062-9113-06-00**
	M 6	**3062-9112-06-00**

häwa

Equipment rail

Technical Data
- DIN 46277 0,67 kg/m

Further technical information ➜ below

Scope of Delivery
- 1 rail

Accessories
- Slides 3061 ➜ below
- Slides 3062 ➜ below
- Mounting screw ➜ below

length		suitable for width		Order No.
mm	inch	mm	inch	
513	20.2	600	23.62	**0362-0402-05-13**
713	28.07	800	31.5	**0362-0402-07-13**
913	35.94	1,000	39.37	**0362-0402-09-13**
1,113	43.82	1,200	47.24	**0362-0402-11-13**

Technical Information

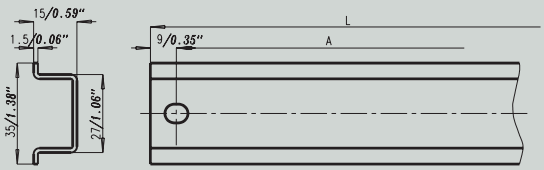

Accessories

Mounting screw Details ➜ **page 183**

	Description		Order No.
	M 6x14 DIN 84		**3055-9084-04-08**
		M 6 x 14	**3055-9084-06-14**

Slides 3061 Details ➜ **page 186**

	Description		Order No.
	Material: Plastic (Polyamide) with threaded steel insert	M 6	**3061-9012-06-00**

Slides 3062 Details ➜ **page186**

		Order No.
	M 6	**3062-9113-06-00**
	M 6	**3062-9112-06-00**

Slide rails 2070

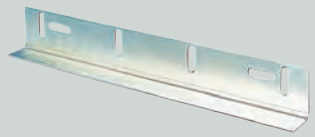

Product Description
Suitable for 19"-element rails for supporting and guiding 19"-slide-in modules to DIN 41494

Technical Data
- Material: 16 ga sheet steel
- Surface finish: Galvanized and blue chrone-plated

Further technical information ➜ page 201

Scope of Delivery
- 1 pair slide rails (1 left and right with mounting hardware)

suitable for
19"-Zinc plated rails

Hole dimension (a)		length		Order No.
mm	inch	mm	inch	
186	7.32	235	9.25	**2070-7046-01-86**
286	11.26	335	13.19	**2070-7046-02-86**
386	15.2	435	17.13	**2070-7046-03-86**
486	19.13	535	21.06	**2070-7046-04-86**
586	23.07	635	25	**2070-7046-05-86**

Technical Information

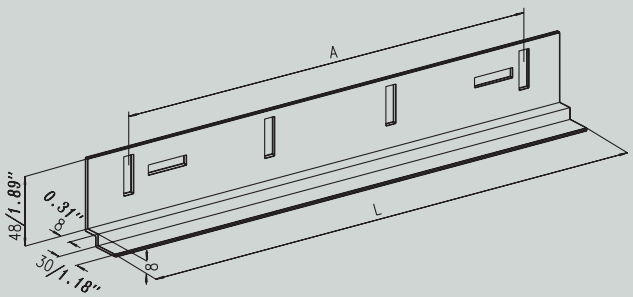

Slide rails 0317

Product Description
For 0318-swing frames.
For supporting heavy slide-in modules

Technical Data
- Material: 16 ga sheet steel
- Surface finish: Galvanized and blue chrone-plated

Further technical information ➜ page 151

Scope of Delivery
- 1 set = 2 pieces (1 left and right with mounting hardware)

suitable for
19"-Swing frame 0318

length		Order No.
mm	inch	
210	8.27	**0317-7001-16-01**
310	12.2	**0317-7001-16-02**
410	16.14	**0317-7001-16-03**

häwa

Technical Information

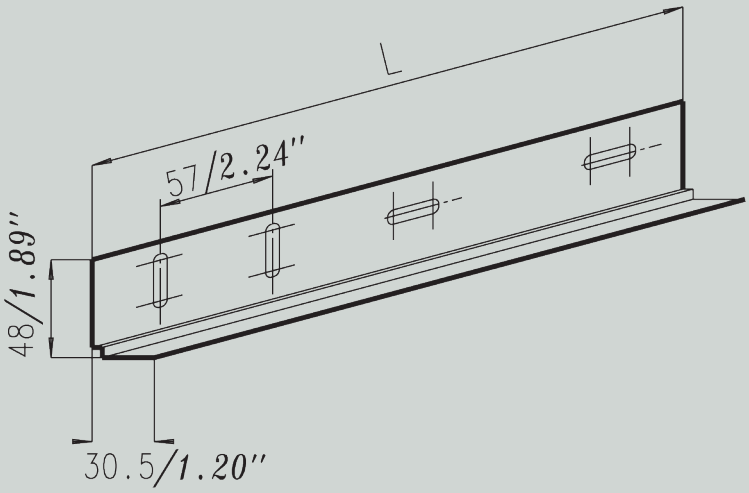

Slide rails 0361

Product Description

For 0361-swing frames for 19"-mounting units.

Technical Data

- Material: 16 ga sheet steel
- Surface finish: Galvanized and blue chrone-plated

Further technical information ➜ below

Scope of Delivery

- 1 set = 2 pieces (1 left and right with mounting hardware)

suitable for

19"-Swing frame 0361

Order No.
0361-9001-50-03

Technical Information

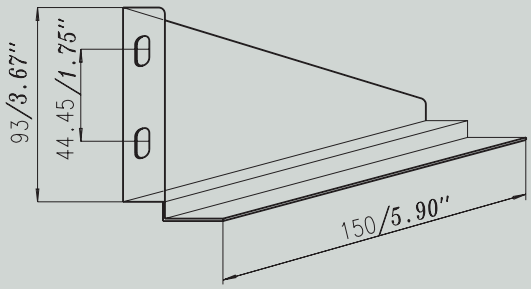

19“-Swing frame 0361

Features
- For installation of 19” components
- Swivel-mounted 0-90°

Product Description

Cross bar is not required, since rotation point and lock are on the same side.
To DIN 41494 and EIA 310 C
- Used to locate slide-in modules, sub-racks etc.
- For installation in cabinets and modular cabinets
- Hinge mounting left or right
- Locking: Casement locks 0.12“ double mandrel
- Load carrying capacity: approx. 88.18 lbs
- Ground connection: On frame

Technical Data
- Material: 16 ga sheet steel
- Surface finish: Powder coated RAL 7035, 16 ga steel

Further technical information ➜ below

Scope of Delivery
- 1 complete swing frame

Note

Center attachments are to be ordered separately

Accessories
- Vertical mounting rail ➜ page 153
- Slide rails 0361 ➜ page 153
- Center attachment ➜ page 140

HE/U	suitable for width		Dimension H		Dimension h		**Order No.**
	mm	inch	mm	inch	mm	inch	
HE/U 3	600	23.62	278	10.94	174.5	6.87	**0361-7003-60-07**
HE/U 6	600	23.62	411	16.18	308	12.13	**0361-7006-60-07**
HE/U 9	600	23.62	544.5	21.44	441.5	17.38	**0361-7009-60-07**
HE/U 12	600	23.62	678	26.69	574.5	22.62	**0361-7012-60-07**
HE/U 15	600	23.62	811.5	31.95	708	27.87	**0361-7015-60-07**
HE/U 18	600	23.62	944.3	37.18	841.5	33.13	**0361-7018-60-07**
HE/U 6	800	31.5	411	16.18	174.5	6.87	**0361-7006-80-07**
HE/U 9	800	31.5	544.5	21.44	441.5	17.38	**0361-7009-80-07**
HE/U 12	800	31.5	678	26.69	574.5	22.62	**0361-7012-80-07**
HE/U 15	800	31.5	811.5	31.95	708	27.87	**0361-7015-80-07**
HE/U 18	800	31.5	944.5	37.19	841.5	33.13	**0361-7018-80-07**

Technical Information

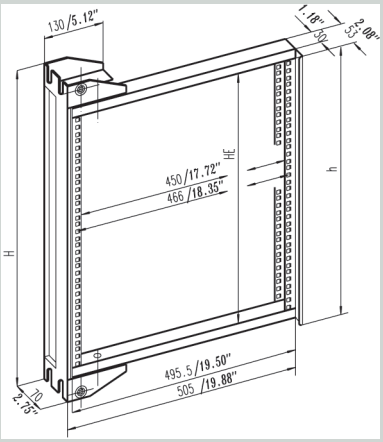

Width 600 and 800 mm

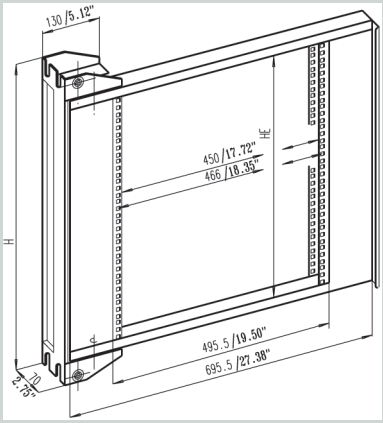

Width 800 mm

häwa

Accessories

Vertical assembly rail Details ➜ **page 132**

Description	suitable for height mm	suitable for height inch	Order No.
Increases versatility of H370/H390 cabinets includes mounting hardware	1,600	62.99	**0391-9016-00-03**
	1,800	70.87	**0391-9018-00-03**
	2,000	78.74	**0391-9020-00-03**

Slide rails 0361 Details ➜ **page 151**

Description	Order No.
For 0361-swing frames for 19“-mounting units.	**0361-9001-50-03**

19“-Swing frame 0318

Product Description

Door switches can be supplied either installed on the lamp or separately with 1,6 foot power cord and plug.

- Locks: For 23.62“ wide cabinets swing frames come with top and bottom 0.12“ double mandrel casement locks, for 31.5“ wide cabinets swing frames come with 0.12“ double mandrel center bar lock
- Load carrying capacity:
- 397 lbs at 90°
- 309 lbs at 165°
- Hinge mounting: Left or right
- Ground connection: Provided

Technical Data

- All lamps are equipped with 16 A schuko sockets.
- Power: 230V 50Hz
- Material: 16 ga sheet steel

Further technical information ➜ page 154

Scope of Delivery

- 1 swing frame without attachment bars (must be ordered separately)

Note

The attachment bars for swing-frames need to be selected to fit the width of the cabinet. For 0-165° the swing support set 165° needs to be selected (please order separately under part no. 0318-7080-18-07). The following lights can be installed in front of the swing frame.

Accessories

- Slide rails 0317 ➜ page 154
- Attachment bars for swing-frame 0318 ➜ page 154
- 165° kit for 19“-swing frame ➜ page 154
- Fluorescent lamp, pre-wired ➜ page 155
- Fluorescent lamp, without quick starter/pre-wired ➜ page 155
- Power cable ➜ page 155
- Protection cover for fluorescent lamps ➜ page 155
- Installation kit ➜ page 155

H1 mm	H1 inch	HE/U	suitable for width mm	suitable for width inch	suitable for height mm	suitable for height inch	Order No.
1,459	57.44	HE/U 31	600	23.62	1,600	62.99	**0318-6016-01-37**
1,659	65.31	HE/U 35	600	23.62	1,800	70.87	**0318-6018-01-37**
1,859	73.19	HE/U 40	600	23.62	2,000	78.74	**0318-6020-01-47**
2,059	81.06	HE/U 44	600	23.62	2,200	86.61	**0318-6022-01-47**
1,459	57.44	HE/U 31	800	31.5	1,600	62.99	**0318-8016-02-37**
1,659	65.31	HE/U 35	800	31.5	1,800	70.87	**0318-8018-02-37**
1,859	73.19	HE/U 40	800	31.5	2,000	78.74	**0318-8020-02-47**
2,059	81.06	HE/U 44	800	31.5	2,200	86.61	**0318-8022-02-47**
1,459	57.44	HE/U 31	800	31.5	1,600	62.99	**0318-8016-03-37**
1,659	65.31	HE/U 35	800	31.5	1,800	70.87	**0318-8018-03-37**
1,859	73.19	HE/U 40	800	31.5	2,000	78.74	**0318-8020-03-47**
2,059	81.06	HE/U 44	800	31.5	2,200	86.61	**0318-8022-03-47**

Technical Information

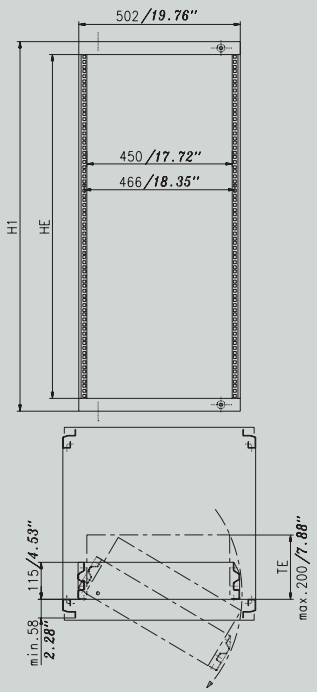

For 600 mm width cabinets

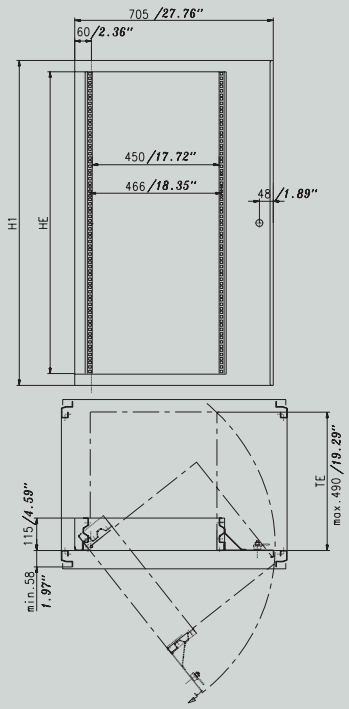

lateral mounting

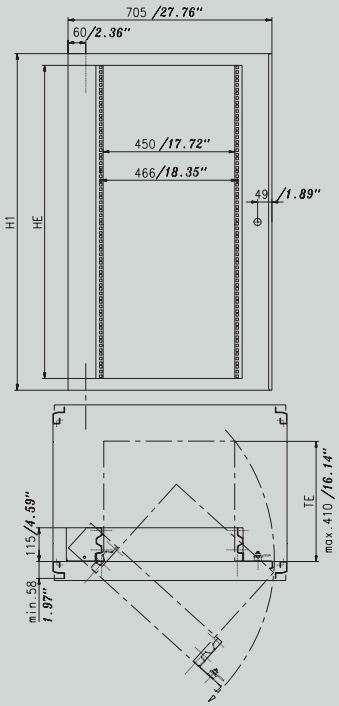

center mounting

Accessories

Slide rails 0317 Details ➜ **page 150**

	Description	length mm	length inch	Order No.
	For 0318-swing frames. For supporting heavy slide-in modules	210	8.27	**0317-7001-16-01**
		310	12.2	**0317-7001-16-02**
		410	16.14	**0317-7001-16-03**

Attachment bars for swing-frame 0318 Details ➜ **page 155**

	Description	suitable for width mm	suitable for width inch	Order No.
	Swing frames can be mounted on the right or left. With attachment bars for 47.24“ wide cabinets, it is possible to install two 23.62“ wide swing frames (each swing frame with external hinge mounting). Opening angle 90°	600	23.62	**0318-7060-90-07**
		800	31.5	**0318-7080-90-07**
		1,000	39.37	**0318-7010-90-07**
		1,200	47.24	**0318-7012-90-07**

165° kit for 19“-swing frame Details ➜ **page 156**

	Description	Order No.
	For swing frames with center or lateral 19“-arrangement (cannot be used in 23.62“ wide cabinets) For mounting swing frames 0318 Extends max. opening angle to 165°	**0318-7080-18-07**

häwa

Fluoresvent lamp, pre-wired Details ➜ **page 169**

	output	Order No.	
	W	**without quick starter**	**with quick starter**
	14	**3080-9042-04-07**	**3080-9042-05-07**

Fluorescent lamp, without quick starter/pre-wired Details ➜ **page 170**

	output	Order No.	
	W	**Installed door switch**	**Door switch with power cord**
	15	**3080-9042-80-97**	**3080-9042-81-97**

Power cable Details ➜ **page 173**

	length		Order No.	
	mm	inch	**Power cable**	**Extension cable**
	3.000	118,11	**3080-9042-25-73**	
	700	27,56		**3080-9042-05-73**
	1.200	47,24		**3080-9042-10-73**

Protection cover for fluorescent lamps Details ➜ **page 173**

	Description	output	length		Order No.
		W	mm	inch	
	for fluorescent lamps **The cover clips onto the fluorescent tube and protects tube against damage.**	15	469	18.46	**3080-0042-15-40**
		18	626	24.65	**3080-0042-18-40**

Installation kit Details ➜ **page 174**

	Description	Order No.
	Required when lamp is mounted at side of cabinet frame	**3080-7006-12-00**

Attachment bars for swing-frame 0318

Product Description

- Swing frames can be mounted on the right or left. With attachment bars for 47.24“ wide cabinets, it is possible to install two 23.62“ wide swing frames (each swing frame with external hinge mounting). Opening angle 90°

Technical Data

- Material: 11 ga sheet steel
- Surface finish: Powder coated RAL 7035, 16 ga steel

Scope of Delivery

- 1 set = 2 attachment bars with mounting hardware

Note

On the 1200 mm wide rails there can also be installed two 600 wide swing frames (both installed on the outside).

suitable for width		Order No.
mm	inch	
600	23.62	**0318-7060-90-07**
800	31.5	**0318-7080-90-07**
1,000	39.37	**0318-7010-90-07**
1,200	47.24	**0318-7012-90-07**

165° kit for 19“-swing frame

Features
- For mounting swing frames 0318
- Extends max. opening angle to 165°

Product Description
For swing frames with center or lateral 19“-arrangement (cannot be used in 23.62“ wide cabinets)

Technical Data
- Material: 11 ga sheet steel
- Surface finish: Powder coated RAL 7035, 16 ga steel

Further technical information ➜ below

Scope of Delivery
- 1 165° swing support set with mounting hardware

suitable for
19“-Swing frame 0318

	Order No.
	0318-7080-18-07

Technical Information

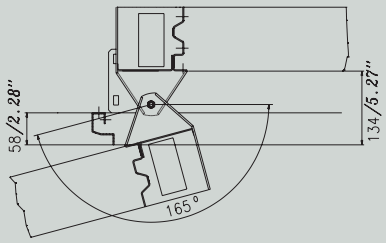

19“-Zinc plated rails

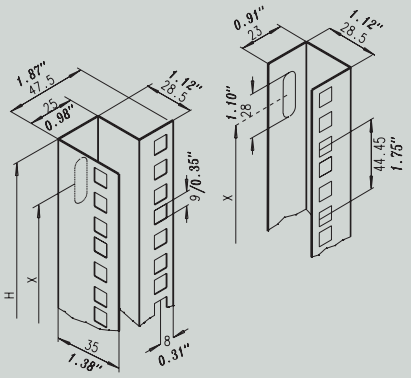

Product Description
- 19“-rails are used for the installation of sub-racks to DIN 41494 and EIA standards in 23.62“ wide cabinets. 19“-rails are adjustable over the depht of the cabinet and may be positioned per the „A“ dimension of slide rails.

Technical Data
- Material: 16 ga sheet steel
- Surface finish: Galvanized and blue chrone-plated

Scope of Delivery
- Item 1: 1 set = 2 rails with mounting hardware
- Item 2: 1 set = 2 rails, 2 U rails with mounting hardware
- Item 3: 1 set = 4 U rails with mounting hardware

Note
The assembly in the cabinet requires the assembly brackets (4 pc. for number ending in 63, 8 pc. for number ending in 73 or 93).

Accessories
- Attachment bracket 0348 ➜ page 157
- Slide rails 2070 ➜ page 157

Dimension X		HE/U	Dimensions		suitable for height		Order No.
mm	inch		mm	inch	mm	inch	
1,416	55.75	HE/U 33	1,478	58.19	1,600	62.99	**0348-7016-33-63**
1,628.5	64.11	HE/U 38	1,690.5	66.56	1,800	70.87	**0348-7018-38-63**
1,816.2	71.5	HE/U 42	1,878.2	73.94	2,000	78.74	**0348-7020-43-63**
2,028.6	79.87	HE/U 47	2,090.6	82.31	2,200	86.61	**0348-7022-47-63**
1,416	55.75	HE/U 33	1,478	58.19	1,600	62.99	**0348-7016-33-73**
1,628.5	64.11	HE/U 38	1,690.5	66.56	1,800	70.87	**0348-7018-38-73**

Dimension X		HE/U	Dimensions		suitable for height		Order No.
1,816.2	71.5	HE/U 42	1,878.2	73.94	2,000	78.74	**0348-7020-42-73**
2,028.6	79.87	HE/U 47	2,090.6	82.31	2,200	86.61	**0348-7022-47-73**
1,416	55.75	HE/U 33	1,478	58.19	1,600	62.99	**0348-7016-33-93**
1,628.5	64.11	HE/U 38	1,690.5	66.56	1,800	70.87	**0348-7018-38-93**
1,816.2	71.5	HE/U 42	1,878.2	73.94	2,000	78.74	**0348-7020-42-93**
2,028.6	79.87	HE/U 47	2,090.6 x 2	82.31 x 0.08	2,200	86.61	**0348-7022-47-93**

Technical Information

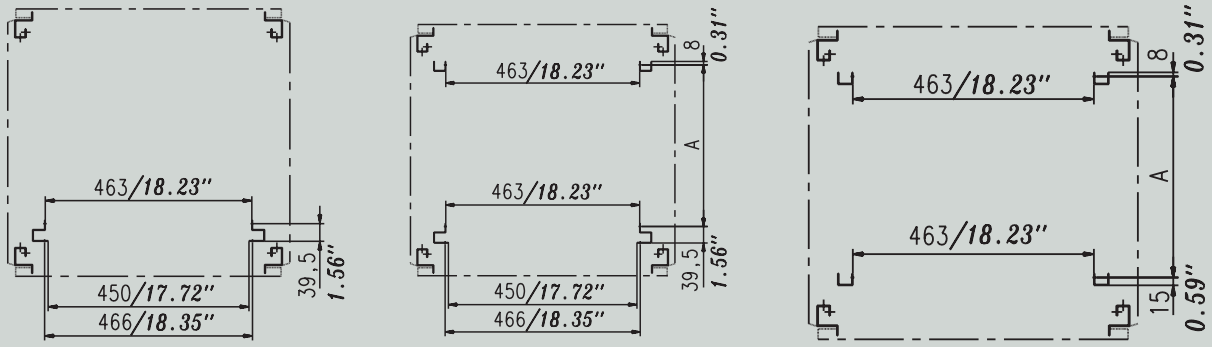

Accessories

Attachment bracket 0348 Details ➜ **page 158**

	Description	Order No.
	For 19“-zinc plated rails **Adjustable over entire depht every 0.98“**	**0348-9029-56-03** **0348-9829-56-03**

Slide rails 2070 Details ➜ **page 150**

	Description	Hole dimension (a)		length		Order No.
		mm	inch	mm	inch	
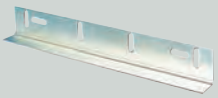	**Suitable for 19“-element rails for supporting and guiding 19“-slide-in modules to DIN 41494**	186	7.32	235	9.25	**2070-7046-01-86**
		286	11.26	335	13.19	**2070-7046-02-86**
		386	15.2	435	17.13	**2070-7046-03-86**
		486	19.13	535	21.06	**2070-7046-04-86**
		586	23.07	635	25	**2070-7046-05-86**

Attachment bracket 0348

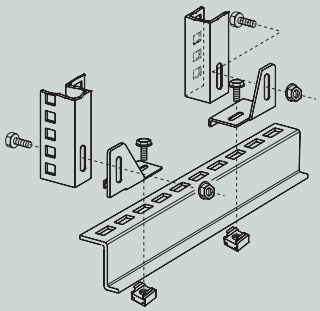

Product Description
For 19“-zinc plated rails
Adjustable over entire depht every 0.98“

Technical Data
- Surface finish: Galvanized and blue chrone-plated

Scope of Delivery
- 4 or 8 attachment brackets with mounting hardware

suitable for
19“-Zinc plated rails

	Order No.
	0348-9029-56-03
	0348-9829-56-03

19“-Intermediate shelves-fixed

Features
- For mounting to 19”-rails

Product Description
Assembled with clip nuts and bolts. The fixed shelf is simply placed onto the bolts and secured.
Slots in the shelves aid air movement and help to prevent heat build-up.

Technical Data
- Load capacity: 110 lbs
- Construction height: 0.98“
- Material: 14 ga steel
- Surface finish: Powder coated RAL 7035

Further technical information ➜ below

Scope of Delivery
- Delivery includes: Intermediate shelf with mounting hardware.

suitable for
- suitable for width: 600 mm; 23.62 inch

Accessories
- Locking bolt ➜ page 159
- Clip-nuts ➜ page 159

Hole dimension (a)		Mounting surface		suitable for depth		Order No.
mm	inch	mm	inch	mm	inch	
386	15.2	462 x 444	18.19 x 17.48	600	23.62	**2010-7263-44-17**
486	19.13	462 x 544	18.19 x 21.42	800	31.5	**2010-7263-54-17**

Technical Information

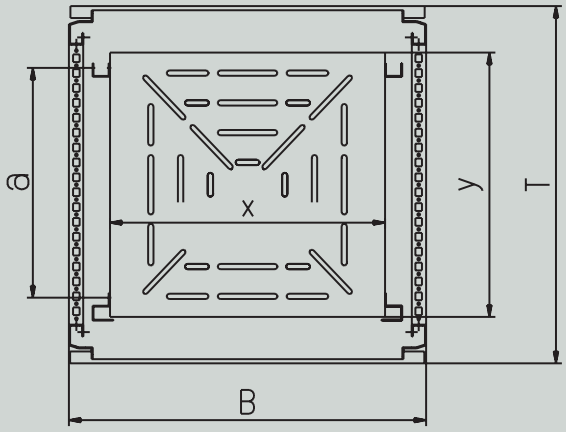

häwa

Locking bolt Details ➜ **page 165**

	Description	Order No.
	For securing equipment such as keyboards, modems etc. on intermediate shelves	**2010-7216-01-51**

Clip-nuts Details ➜ page

	Order No.
M 6	**2070-9102-36-02**

19“Extendable intermediate shelves

Features
- For mounting to 19“-rails

Product Description
Labor saving quick mounting system employs bajonet tabs on intermediate shelves and telescopic rails. Slots in the shelves aid air movement and help to prevent heat build-up.

Technical Data
- Load capacity: 110 lbs
- Construction height: 1.50“
- Extendable length: 18.90“
- Material: 14 ga steel
- Surface finish: Powder coated RAL 7035

Further technical information ➜ below

Scope of Delivery
- Intermediate shelf with telescopic rails and mounting hardware.

Accessories
- Front panel handle ➜ page 160
- Locking bolt ➜ page 160
- Clip-nuts ➜ page 160

Hole dimension (a)		Mounting surface		suitable for width		suitable for depth		Order No.
mm	inch	mm	inch	mm	inch	mm	inch	
386	15.2	424 x 444	16.69 x 17.48	600	23.62	600	23.62	**2010-7261-44-27**
486	19.13	424 x 444	16.69 x 17.48	800	31.5	800	31.5	**2010-7261-44-37**
386	15.2	424 x 544	16.69 x 21.42	600	23.62	800	31.5	**2010-7261-54-27**
486	19.13	424 x 544	16.69 x 21.42	800	31.5	800	31.5	**2010-7261-54-37**

Technical Information

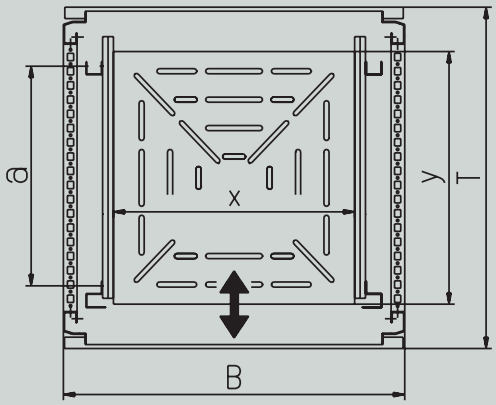

Front panel handle Details ➜ **page 163**

	Description	Order No.
	End pieces - zinc diecasting, black painted **Center piece - anodized aluminum extrusion** **For front panels** **For pull-out shelves**	**2070-9056-02-04**

Locking bolt Details ➜ **page 165**

	Description	Order No.
	For securing equipment such as keyboards, modems etc. on intermediate shelves	**2010-7216-01-51**

Clip-nuts Details ➜ **page 168**

	Order No.
M 6	**2070-9102-36-02**

Intermediate shelves - fixed

Product Description
Intermediate shelves for mounting to cabinet frame. Very large mounting surfaces are obtained by using the entire interior cabinet width. Assembled with clip nuts and bolts. The fixed shelf is simply placed onto the bolts and secured.
Slots in the shelves aid air movement and help to prevent heat build-up.

Technical Data
- Load capacity: 110 lbs
- Construction height: 0.98“
- Material: 14 ga steel
- Surface finish: Powder coated RAL 7035, 16 ga steel

Further technical information ➜ page 161

Scope of Delivery
- Intermediate shelf with mounting hardware

Note
The configuration rails are required to tilt the shelf. The vertical assembly rails are only required for installation in H370 and H390 cabinets.

Accessories
- Configuration rails ➜ page 161
- Clip-nuts ➜ page 161
- Vertical mounting rail ➜ page 161
- Locking bolt ➜ page 161

Hole dimension (a)		Mounting surface		suitable for width		suitable for depth		Order No.
mm	inch	mm	inch	mm	inch	mm	inch	
495	19.49	533 x 444	20.98 x 17.48	600	23.62	600	23.62	**2010-7266-44-17**
695	27.36	533 x 444	20.98 x 17.48	600	23.62	800	31.5	**2010-7268-44-17**
695	27.36	533 x 544	20.98 x 21.42	600	23.62	800	31.5	**2010-7268-54-17**
495	19.49	733 x 444	28.86 x 17.48	800	31.5	600	23.62	**2010-7286-44-17**
695	27.36	733 x 444	28.86 x 17.48	800	31.5	800	31.5	**2010-7288-44-17**
695	27.36	733 x 544	28.86 x 21.42	800	31.5	800	31.5	**2010-7288-54-17**

häwa

Technical Information

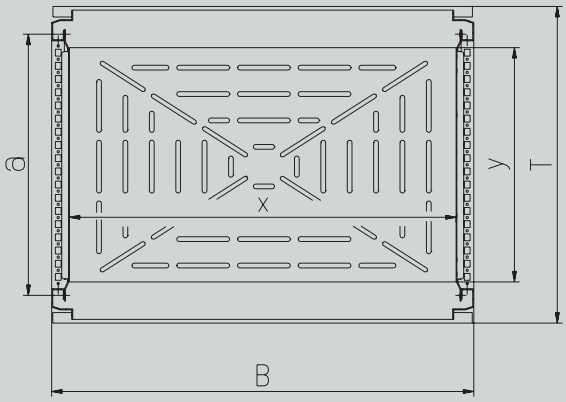

Accessories

Configuration rails Details ➜ **page 187**

suitable for depth		Order No.
mm	inch	
600	23.62	**0396-7014-60-00**
800	31.5	**0396-7014-80-00**

Clip-nuts Details ➜ **page 168**

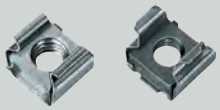

	Order No.
M 6	**2070-9102-36-02**

Vertical assembly rail Details ➜ **page 132**

Description	suitable for height		Order No.
	mm	inch	
Increases versatility of H370/H390 cabinets includes mounting hardware	1,600	62.99	**0391-9016-00-03**
	1,800	70.87	**0391-9018-00-03**
	2,000	78.74	**0391-9020-00-03**

Locking bolt Details ➜ **page 165**

Description	Order No.
For securing equipment such as keyboards, modems etc. on intermediate shelves	**2010-7216-01-51**

Extendable intermediate shelves

Product Description

Labor saving quick mounting system employs bajonet tabs on intermediate shelves and telescopic rails. Slots in the shelves aid air movement and help to prevent heat build-up.

Technical Data

- Load capacity: 110 lbs
- Construction height: 1.50“
- Extendable length: 18.90“
- Material: 14 ga steel
- Surface finish: Powder coated RAL 7035, 16 ga steel

Further technical information ➜ page 162

Scope of Delivery

- Intermediate shelf with telescopic rails and mounting hardware

Accessories

- Clip-nuts ➜ below
- Vertical mounting rail ➜ page 163
- Front panel handle ➜ page 163
- Locking bolt ➜ page 163

Hole dimension (a)		Mounting surface		suitable for width		suitable for height		Order No.
mm	inch	mm	inch	mm	inch	mm	inch	
495	19.49	495 x 444	19.49 x 17.48	600	23.62	600	23.62	**2010-7266-44-37**
695	27.36	495 x 444	19.49 x 17.48	600	23.62	800	31.5	**2010-7268-44-37**
695	27.36	495 x 544	19.49 x 21.42	600	23.62	800	31.5	**2010-7268-54-37**
495	19.49	695 x 444	27.36 x 17.48	800	31.5	600	23.62	**2010-7286-44-37**
695	27.36	695 x 444	27.36 x 17.48	800	31.5	800	31.5	**2010-7288-44-37**
695	27.36	695 x 544	27.36 x 21.42	800	31.5	800	31.5	**2010-7288-54-37**

Technical Information

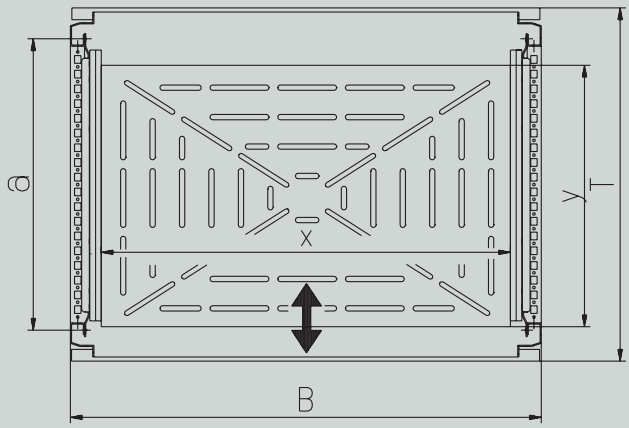

Accessories

Clip-nuts Details ➜ **page 168**

	Order No.
M 6	**2070-9102-36-02**

häwa

Vertical assembly rail Details ➜ **page 132**

	Description	suitable for height mm	suitable for height inch	Order No.
	Increases versatility of H370/H390 cabinets includes mounting hardware	1,600	62.99	**0391-9016-00-03**
		1,800	70.87	**0391-9018-00-03**
		2,000	78.74	**0391-9020-00-03**

Front panel handle Details ➜ **below**

	Description	Order No.
	End pieces - zinc diecasting, black painted **Center piece - anodized aluminum extrusion** **For front panels** **For pull-out shelves**	**2070-9056-02-04**

Locking bolt Details ➜ **page 165**

	Description	Order No.
	For securing equipment such as keyboards, modems etc. on intermediate shelves	**2010-7216-01-51**

Front panel handle

Features
- For front panels
- For pull-out shelves

Product Description
End pieces - zinc diecasting, black painted
Center piece - anodized aluminum extrusion

Technical Data
Further technical information ➜ below

Scope of Delivery
- 1 set consisting of: 2 center pieces, 4 end pieces

suitable for
19"-Extendable intermediate shelves and Extendable intermediate shelves

Order No.
2070-9056-02-04

Technical Information

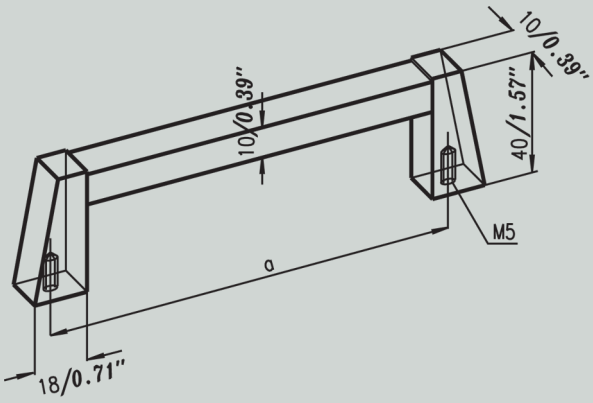

Intermediate shelves 2 U

Features
- For mounting fo 19“-rails

Product Description
For mounting in all 19“-cabinets to DIN 41494 and EIA standards
For fixed installation or extendable to full length (14.88“) with telescopic rails

Technical Data
- Construction height 2 U
- Load carrying capacity approx. 55 lbs
- Dimensions: 448 x 300 mm; 17.64 x 11.81 inch
- Material: 14 ga steel

Scope of Delivery
- 1 piece complete

Accessories
- Locking bolt ➜ unten
- Clip-nuts ➜ unten

	Order No.
	2010-7262-30-17

Accessories

Locking bolt Details ➜ **page 165**

	Description	Order No.
	For securing equipment such as keyboards, modems etc. on intermediate shelves	**2010-7216-01-51**

Clip-nuts Details ➜ **page 168**

		Order No.
	M 6	**2070-9102-36-02**

Intermediate shelves 2 U

Features
- For mounting to 19“-rails

Product Description
For mounting in all 19“ cabinets

Technical Data
- Dimensions: 410 x 360 mm; 16.14 x 14.17 inch
- Material: 14 ga steel

Accessories
- Locking bolt ➜ below
- Clip-nuts ➜ below

	Order No.
	2010-7262-30-27

Locking bolt Details ➜ **page 165**

	Description	Order No.
	For securing equipment such as keyboards, modems etc. on intermediate shelves	**2010-7216-01-51**

Clip-nuts Details ➜ **page 168**

		Order No. without grounding tips
	M 6	**2070-9102-36-02**

häwa

Locking bolt

Product Description
For securing equipment such as keyboards, modems etc. on intermediate shelves

Scope of Delivery
- 4 locking bolts with clip-nuts

suitable for
19"-Intermediate shelves-fixed, 19"-Extendable intermediate shelves, Intermediate shelves - fixed, Extendable intermediate shelves, Intermediate shelves 2 U and

	Order No.
	2010-7216-01-51

Printer rack

Product Description
Suitable for Extendable intermediate shelves from cabinet depth = 600 mm

Technical Data
- Dimensions: 495 x 477 x 425 mm; 19,49 x 18,78 x 16,73 inch
- Material: sheet steel
- Surface finish: Powder coated RAL 7035,

Scope of Delivery
- 1 Printer rack

Accessories
- Extendable intermediate shelves ➜ unten

	Order No.
	2035-0240-01-07

Accessories

Extendable intermediate shelves Details ➜ **page 162**

Description	Dimension(a)		Mounting surface (XxY)		suitable for width		suitable for height		Order No.
	mm	inch	mm	inch	mm	inch	mm	inch	
Labor saving quick mounting system employs bajonet tabs on intermediate shelves and telescopic rails	495	19,49	495 x 444	19,49 x 17,48	600	23,62	600	23,62	**2010-7266-44-37**
	695	27,36	495 x 444	19,49 x 17,48	600	23,62	800	31,5	**2010-7268-44-37**
	695	27,36	495 x 544	19,49 x 21,42	600	23,62	800	31,5	**2010-7268-54-37**
	495	19,49	695 x 444	27,36 x 17,48	800	31,5	600	23,62	**2010-7286-44-37**
	695	27,36	695 x 444	27,36 x 17,48	800	31,5	800	31,5	**2010-7288-44-37**
	695	27,36	695 x 544	27,36 x 21,42	800	31,5	800	31,5	**2010-7288-54-37**

Mounting kits for grounding straps for H370/H390

Product Description
For H370/H390 cabinets
Hardware for mounting groundings straps in häwa cabinets and modular cabinets

Scope of Delivery
- 1 set consisting of: 16 pcs. contact washers D=8 mm, 9 pcs. hexagon nuts M8, 1 pc. hexagon screw M8x20, 6 pcs. hexagon screws M8x12, 14 pcs. ground symbol lables

	Order No.
	3080-9036-03-90

Mounting kits for grounding straps for H375/H395

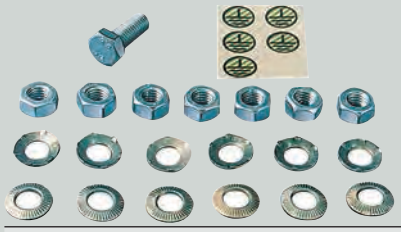

Product Description
For H375/H395 cabinets
Hardware for mounting grounding straps in häwa cabinets and modular cabinets

Scope of Delivery
- 1 set consisting of: 20 pcs. contact washers D=8 mm, 12 pcs. hexagon nuts M8, 2 pcs. hexagon screws M8x20, 3 pcs. hexagon screws M8x12, 14 pcs. ground symbol lables

	Order No.
	3080-9036-03-95

EMI/RFI- shield rail

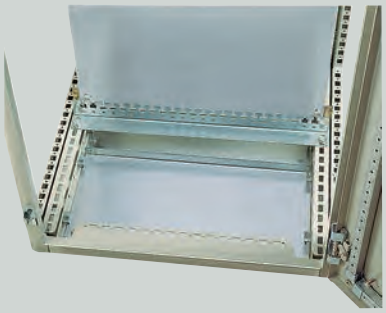

Product Description
For grounding shielded cables.

Technical Data
- Material: 11 ga sheet steel
- Surface finish: Galvanized

Further technical information ➜ below

Scope of Delivery
- 1 EMI/RFI-shielded rail without mounting hardware

Accessories
- Hexagon head screw Verbus-Tensilock ➜ page 167
- Hex-nut Verbus-Tensilock ➜ page 167

length		suitable for width		Order No.
mm	inch	mm	inch	
513	20.2	600	23.62	**0396-0016-60-00**
713	28.07	800	31.5	**0396-0016-80-00**
913	35.94	1,000	39.37	**0396-0016-10-00**
1,113	43.82	1,200	47.24	**0396-0001-12-00**

Technical Information

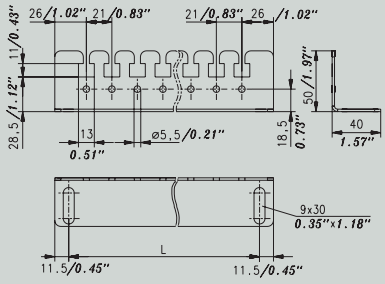

häwa

Accessories

Hexagon head screw Verbus-Tensilock Details ➜ **page 182**

	Order No.
M 8 x 16	**3003-9500-08-16**

Hex-nut Verbus-Tensilock Details ➜ **page 183**

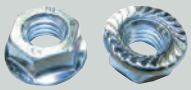

Description	Order No.
Self-locking nuts for use without washer	**3003-9500-08-00**

Grounding straps

Technical Data

- Material: Strap: copper wire (flexible), ends tin-plated; Bolt: Sheet steel, surface copper-plated

Further technical information ➜ below

length		Order No.	
mm	inch	with bolt	without bolt
360	14,17	3080-7036-01-38	3080-7036-11-38
80	3,15	3080-7036-01-00	3080-7036-11-00
200	7,87	3080-7036-01-20	3080-7036-11-20

Technical Information

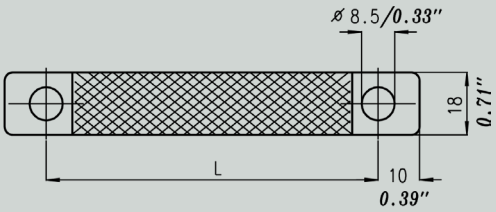

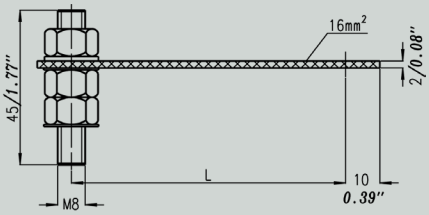

Grounding cable

Technical Data

- Color: green/yellow

Further technical information ➜ page 168

length		Order No.	Order No.
mm	inch	d 6 mm ²	16 mm ²
200	7,87	**3080-9036-06-20**	**3080-9036-16-35**
350	13,78	**3080-9036-06-35**	**3080-9036-16-35**

Technical Information

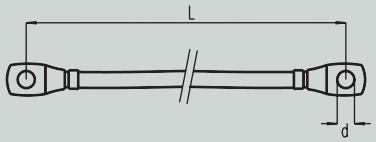

Contact disk

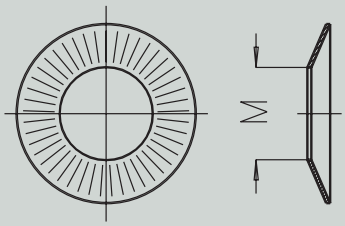

Product Description
for optimum grounding

Technical Data
- Material: steel

Order No.	
M 6	M 8
3003-9036-06-10	3003-9036-08-20

Ground symbol label

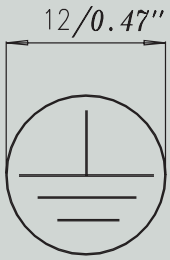

Technical Data
- Color: green/yellow, Zeichen schwarz
- Material: self-adhesive, strongly adhesive

Order No.
3080-9102-13-12

Clip-nut

Technical Data
- Mounting cut out 9,0 oder 9,5 mm²
- Material: Steel, galvanized

Scope of Delivery
- 1 set = 100 pieces

Accessories
- **Hexagon head screw Verbus-Tensilock**
  ➜ Seite 185

Thread	for sheet metal thickness mm	**Order No. with grounding tips**
M 5	1,5-2,0	**2070-9102-45-00**
M 6	1,5-2,0	**2070-9102-46-03**
M 6	2,5-3,5	**2070-9102-46-00**

häwa

Fluorescent lamp, pre-wired

Product Description

For 23.62“, 31.50“, 39.37“ and 47.24“ wide häwa cabinets

Pre-wired lamps can be installed under the cabinet roof or, with an installation kit, at the side frame of the cabinet.

- Pre-wired lamps come with power input and extension connectors which greatly reduce installation time when pre-engineered power cables and extension cables are used.
- Supplied with or without quick starter
- Plug and receptacle effected to the cabinet inside.

Technical Data

- With installed door switch and 16 A schuko socket
- Power: 230V 50Hz
- output: 14 W
- Material: Sheet steel

Scope of Delivery

- 1 piece with mounting hardware

suitable for

19“-Swing frame 0318

Note

suitable for cabinets 23.62“, 31.50“, 39.37“, 47.24“ and 19“-Swing frame 0318

Accessories

- Protection cover for fluorescent lamps ➜ below
- Power cable ➜ below
- Installation kit ➜ below

Order No.	
without quick starter	**with quick starter**
3080-9042-04-07	**3080-9042-05-07**

Accessories

Protection cover for fluorescent lamps Details ➜ **page 173**

Description	output	length		Order No.
	W	mm	inch	
for fluorescent lamps **The cover clips onto the fluorescent tube and protects tube against damage.**	14	397	15.63	**3080-0042-14-40**

Power cable Details ➜ **page 173**

length		Order No.
mm	inch	
3,000	118.11	**3080-9042-25-73**
700	27.56	**3080-9042-05-73**
1,200	47.24	**3080-9042-10-73**

Installation kit Details ➜ **page 174**

Description	Order No.
Required when lamp is mounted at side of cabinet frame	**3080-7006-12-00**

Fluorescent lamp, without quick starter/pre-wired

Product Description
For häwa cabinets from a width of 31.50“
Pre-wired lamps come with power input and extension connectors on the rear of the lamps. This permits the installation of full size swing frames.
Door switches can be supplied either installed on the lamp or separately with 1,6 foot power cord and plug.

Technical Data
- All lamps are equipped with 16 A schuko sockets.
- Power: 230V 50Hz
- output: 15 W
- Material: Sheet steel
- Surface finish: Powder coated RAL 7035, 16 ga steel

Scope of Delivery
- 1 piece with mounting hardware

suitable for
19“-Swing frame 0318

Note
Fits 19” swing-frame 0318 and häwa cabinets with widths 800 mm and above

Accessories
- Power cable ➜ below
- Protection cover for fluorescent lamps ➜ below
- Installation kit ➜ below

Order No.	
Installed door switch	**Door switch with power cord**
3080-9042-80-97	**3080-9042-81-97**

Accessories

Power cable Details ➜ **page 173**

	length		Order No.
	mm	inch	
	3,000	118.11	**3080-9042-25-73**
	700	27.56	**3080-9042-05-73**
	1,200	47.24	**3080-9042-10-73**

Protection cover for fluorescent lamps Details ➜ **page 173**

Description	output	length		Material	Order No.
	W	mm	inch		
for fluorescent lamps The cover clips onto the fluorescent tube and protects tube against damage.	15	469	18.46	PMMA transparent	**3080-0042-15-40**
	18	626	24.65	PMMA transparent	**3080-0042-18-40**

Installation kit Details ➜ **page 174**

	Description	Order No.
	Required when lamp is mounted at side of cabinet frame	**3080-7006-12-00**

häwa

Linestra Lampe 9042 (Incandescent tube)

Product Description
For 23.62“, 31.50“, 39.37“ and 47.24“ wide häwa cabinets
Pre-wired lamps can be installed under the cabinet roof or, with an installation kit, at the side frame of the cabinet.
Pre-wired lamps come with power input and extension connectors which greatly reduce installation time when pre-engineered power cables and extension cables are used.

Technical Data
- Power: 230V 50/60Hz
- output: 35 W
- Material: Sheet steel
- Surface finish: Powder coated RAL 7035, 16 ga steel

Scope of Delivery
- 1 piece with mounting hardware

Note
suitable for cabinets 23.62“, 31.50“, 39.37“, 47.24“

Accessories
- Power cable ➜ below
- Installation kit ➜ below

Order No.
3080-9042-60-97

Accessories

Power cable Details ➜ **page 173**

length		Order No.
mm	inch	
3,000	118.11	**3080-9042-25-73**
700	27.56	**3080-9042-05-73**
1,200	47.24	**3080-9042-10-73**

Installation kit Details ➜ **page 174**

Description	Order No.
Required when lamp is mounted at side of cabinet frame	**3080-7006-12-00**

Fluorescent lamp, EMI/RFI tested

Product Description
Fits häwa cabinets with widths 600, 800, 1000, and 1200 mm. Quick and easy assembly.
- With quick-starter
- Rocker switch and schuko socket (for US: 115V US-socket, 16A)

Technical Data
- Material: Sheet steel
- Surface finish: Powder coated RAL 7035, 16 ga steel

Accessories
- Protection cover for fluorescent lamps ➜ page 172
- Door switch ➜ page 172

output	length		suitable for width		Order No.
W	mm	inch	mm	inch	
15	518	20.39	600	23.62	**3080-9041-60-27**
18	718	28.27	800	31.5	**3080-9041-80-27**
18	918	36.14	1,000	39.37	**3080-9041-10-27**

output	length		suitable for width		Order No.
W	mm	inch	mm	inch	
18	1,118	44.02	1,200	47.24	**3080-9041-12-27**
15	518	20.39	600	23.62	**3080-9041-60-67**
18	718	28.27	800	31.5	**3080-9041-80-67**
18	918	36.14	1,000	39.37	**3080-9041-10-67**
18	1,118	44.02	1,200	47.24	**3080-9041-12-67**

Accessories

Protection cover for fluorescent lamps Details ➜ **page 173**

Description	output	length		Order No.
	W	mm	inch	
for fluorescent lamps **The cover clips onto the fluorescent tube and protects tube against damage.**	18	626	24.65	**3080-0042-18-40**

Door switch Details ➜ **page 173**

Description	Order No.
Complete with mounting hardware for installation in häwa cabinets **Switches cabinet lights or other devices ON/OFF when the door is opened.** **For installation in häwa cabinets**	**3080-7041-61-95**

Linestra lamp (Incandescent tube)

Product Description
With interference-free Linestra tube. Quick and easy assebly.

Technical Data
- Material: Sheet steel

Scope of Delivery
- 1 piece with mounting hardware

Note
suitable for cabinets 23.62“, 31.50“, 39.37“, 47.24“

Accessories
- Door switch ➜ below

output	length		suitable for width		Order No.
W	mm	inch	mm	inch	
35	518	20.39	600	23.62	**3080-9041-60-37**
60	718	28.27	800	31.5	**3080-9041-80-37**
60	918	36.14	1,000	39.37	**3080-9041-10-37**
60	1,118	44.02	1,200	47.24	**3080-9041-12-37**

Accessories

Door switch Details ➜ **page 173**

Description	Order No.
Complete with mounting hardware for installation in häwa cabinets **Switches cabinet lights or other devices ON/OFF when the door is opened.** **For installation in häwa cabinets**	**3080-7041-61-95**

häwa

Protection cover for fluorescent lamps

Features
- for fluorescent lamps

Product Description
The cover clips onto the fluorescent tube and protects tube against damage.

Technical Data
- Material: PMMA transparent

Scope of Delivery
- 1 piece

output	length		Order No.
W	mm	inch	
14	397	15.63	**3080-0042-14-40**
15	469	18.46	**3080-0042-15-40**
18	626	24.65	**3080-0042-18-40**

Power cable

Scope of Delivery
- Power cable: 1 piece with plug on one end and tinned wires on the other
- Extension cable: 1 piece with plugs on both ends

suitable for
19"-Swing frame 0318, Fluorescent lamp, pre-wired, Fluorescent lamp, without quick starter/ prewired and

length		Order No.	
		Power cable	**Extension cable**
mm	inch		
3.000	118,11	**3080-9042-25-73**	
700	27,56		**3080-9042-05-73**
1.200	47,24		**3080-9042-10-73**

Door switch

Features
- For installation in häwa cabinets

Product Description
Complete with mounting hardware for installation in häwa cabinets
Switches cabinet lights or other devices ON/ OFF when the door is opened.

Technical Data
- Contact: 1 normally closed/ 1 normally open contact
- Continuous current: 10 A

Scope of Delivery
- 1 piece with mounting hardware

suitable for
Fluorescent lamp, EMI/RFI tested and Linestra lamp (Incandescent tube)

Order No.
3080-7041-61-95

Installation kit

Product Description
Required when lamp is mounted at side of cabinet frame

Scope of Delivery
- Cover plate and mounting hardware

Note
Fits lamps with part-no. ending in 07 and 97

Order No.
3080-7006-12-00

Enhancement kits IP 56 for H395/H375

Features
- To increase IP rating from IP55 to IP56
- for all H395 and H375 modular cabinets

Product Description
Gasket 10x2 mm, self-adhesive, and sealing washers, 11 mm diameter, fuer additional sealing of side panels and fittings

Technical Data
- Quality: Fire behavior: achieves FMVSS 302; temperature resistance: -30 to +100°C; water absorption: ASTM D 1056-80 +/- 5%; Durability: good
- Color: Black
- Sealing washers

Scope of Delivery
- 1 set

Order No.
0396-7056-01-00

Joining rubber gasket

Product Description
One-sided self-adhesive with oil-resistant adhesive

Technical Data
- Dimensions: 0.43“ x 0.16“
- Material: Cellulose
- Quality: Neoprene
- Color: Black

Scope of Delivery
- sold by the meter

Order No.
3080-0102-18-00

Transport brackets

Product Description
For better stability and weight distribution when transporting two or more bolted together cabinets by crane. The transport brackets are bolted to the cabinets` top. Flange joints with two M12 hex bolts, replacing the standard transport lugs. Max. load carrying capacity up to approx. 1.5 t for at least 3 bolted together cabinets

Technical Data
- Surface finish: Galvanized and blue chrone-plated

Further technical information ➜ page 175

Scope of Delivery
- 1 set consisting of:
- 4 transport brackets
- 8 bolts M 12

Order No.
0396-0008-01-00

häwa

Technical Information

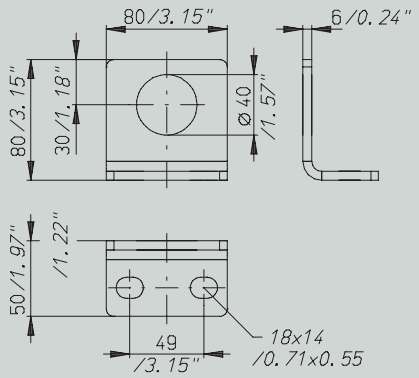

Double caster

Product Description
Optionally with or without brake

Technical Data
- Load capacity: 220.5 lbs
- Attachment: M 10
- Caster width: 0.98"
- Rubber ring: blue-grey

Further technical information ➜ below

Scope of Delivery
- 1 set = 4 casters

Note
For improved stability we always recommend adding the reinforcement brackets

Accessories
- Reinforcement brackets ➜ below

Load capacity	Order No.	
	without brake	with brake
100 kg	2070-9018-24-72	2070-9018-24-78
80 kg		2070-9018-24-98

Technical Information

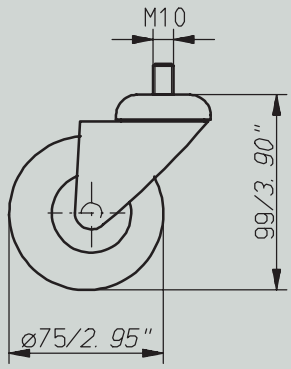

Accessories

Reinforcement brackets Details ➜ **page 176**

Description	suitable for width		Order No.
	mm	inch	
For improved stability we always recommend adding the reinforcement brackets	600	23.62	**0396-7060-24-07**
For installation under casters	800	31.5	**0396-7080-24-07**

Rotating caster with locking

Product Description
Alternatively with or without brake

Scope of Delivery
- 1 set = 4 caster

Note
For improved stability we always recommend adding the reinforcement brackets

	Order No.
	2070-9018-24-97
	2070-9018-24-77

Reinforcement brackets

Features
- For installation under casters

Product Description
For improved stability we always recommend adding the reinforcement brackets

Technical Data
- Material: 11 ga sheet steel
- Surface finish: Powder coated RAL 7035

Scope of Delivery
- 1 set = 2 brackets, 4 U-washers

suitable for width		Order No.
mm	inch	
600	23.62	**0396-7060-24-07**
800	31.5	**0396-7080-24-07**

Leveling feet

Technical Data
- Capacity: 300 kg
- Adjustable height: 47-56 mm
- Surface finish: Plastic, black

Further technical information ➜ below

Scope of Delivery
- 1 set = 4 levelling feet with attachment nuts

	Order No.
	2070-9018-64-35

Technical Information

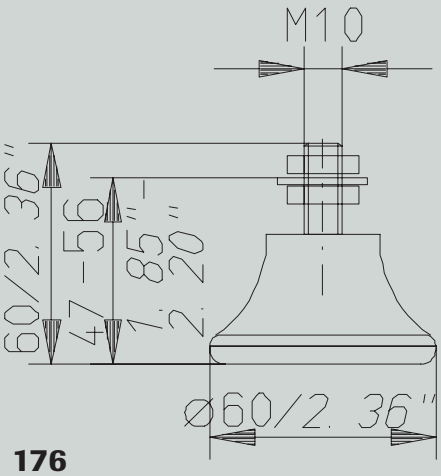

häwa

Partition panel

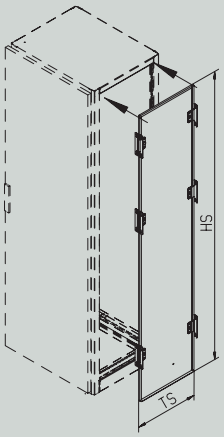

Product Description
Seperates individual units in modular cabinet suites. Protection class is maintained

Technical Data
- includes grounding connection
- Material: 16 ga sheet steel
- Surface finish: Galvanized

Scope of Delivery
- 1 partition panel wihout mounting hardware

Note
Please use Connector Set Standard for mounting

Accessories
- Joining rubber gasket ➜ below
- Connecting bolts ➜ below

suitable for height		suitable for depth		Dimension HS		Dimension TS				Order No.
mm	inch	mm	inch	mm	inch	mm	inch	mm	inch	
1,600	62.99	400	15.75	1,488	58.58	268	10.55	268	10.55	**0396-0016-40-63**
1,800	70.87	400	15.75	1,688	66.46	268	10.55	268	10.55	**0396-0018-40-63**
2,000	78.74	400	15.75	1,888	74.33	268	10.55	268	10.55	**0396-0020-40-63**
1,800	70.87	500	19.69	1,688	66.46	368	14.49	368	14.49	**0396-0018-50-63**
2,000	78.74	500	19.69	1,888	74.33	368	14.49	368	14.49	**0396-0020-50-63**
1,600	62.99	600	23.62	1,488	58.58	468	18.43	468	18.43	**0396-0016-60-63**
1,800	70.87	600	23.62	1,688	66.46	468	18.43	468	18.43	**0396-0018-60-63**
2,000	78.74	600	23.62	1,888	74.33	468	18.43	468	18.43	**0396-0020-60-63**
2,200	86.61	600	23.62	2,088	82.2	468	18.43	468	18.43	**0396-0022-60-63**
1,800	70.87	800	31.5	1,688	66.46	668	26.3	668	26.3	**0396-0018-80-63**
2,000	78.74	800	31.5	1,888	74.33	668	26.3	668	26.3	**0396-0020-80-63**

Accessories

Joining rubber gasket Details ➜ **page 174**

Description	Order No.
One-sided self-adhesive with oil-resistant adhesive	**3080-0102-18-00**

Connecting bolts Details ➜ **page 189**

Description	Order No.
For modular installation of cabinets	**0396-7002-00-43**
	0376-7002-00-43

Panels with plug cut-outs

Features
- For covering cabinet 0399
- For utilization with connectors

Product Description
For covering cabinet type 0399
Attachment: By means of 6 self-locking nuts
Seal: Continuous clip-on rubber, corresponding to protection class IP 559
Ground connection: Is provided

Technical Data
- Material: 14 ga steel
- Surface finish: Galvanized

Further technical information ➜ below

Scope of Delivery
- Panel with plug cut-outs with mounted clip-on rubber and 6 self-locking nuts M6

Note
Diagram pockets in width 400/500/600 mm also fit in double doors of 800/1000/1200 mm wide cabinets respectively.

Accessories
- Adapter flanges ➜ below

Hole dimension (a)		Dimensions		suitable for height		suitable for depth		Order No.
mm	inch	mm	inch	mm	inch	mm	inch	
278	10.94	1,686 x 295	66.38 x 11.61	1,800	70.87	400	15.75	**0396-0018-41-52**
278	10.94	1,886 x 295	74.25 x 11.61	2,000	78.74	400	15.75	**0396-0020-41-52**
378	14.88	1,686 x 395	66.38 x 15.55	1,800	70.87	500	19.69	**0396-0018-51-52**
378	14.88	1,886 x 395	74.25 x 15.55	2,000	78.74	500	19.69	**0396-0020-51-52**
478	18.82	1,686 x 495	66.38 x 19.49	1,800	70.87	600	23.62	**0396-0018-61-52**
478	18.82	1,886 x 495	74.25 x 19.49	2,000	78.74	600	23.62	**0396-0020-61-52**

Technical Information

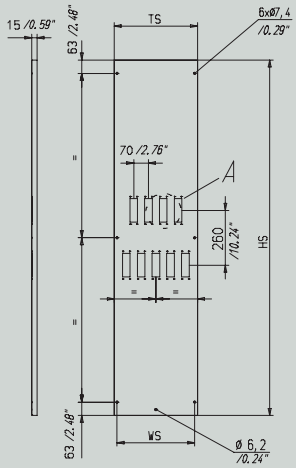

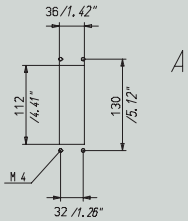

Accessories0

Adapter flanges Details ➜ **page 190**

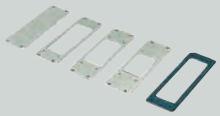

Description	Order No.
Reduction pieces for the respective plug connectors. For mounting over the pre-cut openings.	**3080-9104-10-00**
	3080-9104-20-00
	3080-9104-30-00
	3080-9104-40-00

häwa

Rubber clamps for cable entry plates

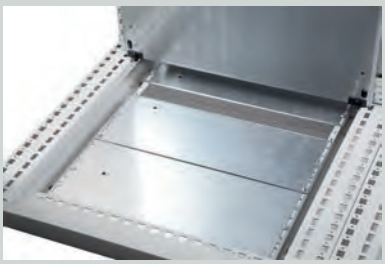

Product Description
Divided cable entry plates permit cable entry without drilling of holes.
Particularly suitable for same cable diameters.

Technical Data
- Temperature resistance: -40 - +100°C shortly up to +130°C
- Material: flexible PU-foam 0.98“ x 0.98“, self adhesive on one sideResistant to: mineral oil, petrol, aging (internal area)

Further technical information ➜ below

Scope of Delivery
- 1 set = 2 rubber profiles

Note
2 sets B-31.50“ or B-39.37“ are to be ordered for cabinets H390 B-62.99“ and B-78.74“.

length		suitable for width		Order No.
mm	inch	mm	inch	
395	15.55	600	23.62	**0396-7060-00-71**
595	23.43	800	31.5	**0396-7080-00-71**
795	31.3	1,000	39.37	**0396-7010-00-71**
995	39.17	1,200	47.24	**0396-7012-00-71**

Technical Information

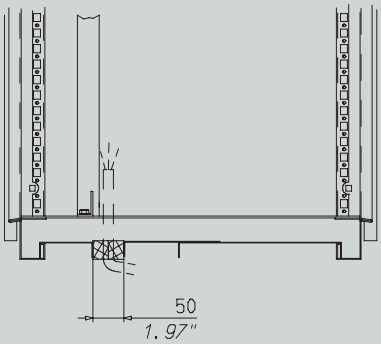

Diagram pocket 0396

Product Description
For mounting onto perforated door frame

Technical Data
- Depth: 90 mm
- Mounting: 4 St. thread-rolling screw M5x12
- Material: 18 ga sheet steel, Painted, RAL 7035
- Surface finish: Powder coated RAL 7035

Scope of Delivery
- 1 diagramm pocket with mounting hardware

Note
Diagram pockets in width 400/500/600 mm also fit in double doors of 800/1000/1200 mm wide cabinets respectively.

Dimensions		suitable for width		Order No.
mm	inch	mm	inch	
265 x 260 x 90	10.43 x 10.24 x 3.54	400	15.75	**0396-7115-40-07**
365 x 260 x 90	14.37 x 10.24 x 3.54	500	19.69	**0396-7115-50-07**
465 x 260 x 90	18.31 x 10.24 x 3.54	600	23.62	**0396-7115-60-07**
665 x 260 x 90	26.18 x 10.24 x 3.54	800	31.5	**0396-7115-80-07**
865 x 260 x 90	34.06 x 10.24 x 3.54	1,000	39.37	**0396-7115-10-07**

Fold-away support (for diagramm pockets)

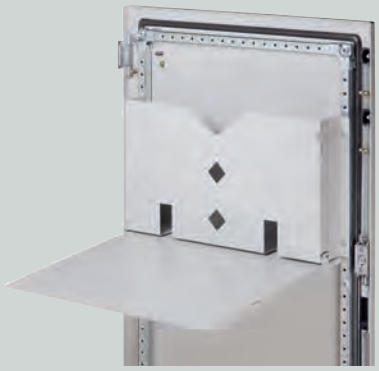

Product Description
Can be retrofitted to diagram packet 0396.

Technical Data
- Load bearing capacity up to 10 kg

Scope of Delivery
- 1 x support with mounting kit and installation manual 0396-7015-00-77

Note
Always use together with diagram pocket.

suitable for width		Order No.
mm	inch	
400	15.75	**0396-7015-40-07**
500	19.69	**0396-7015-50-07**
600	23.62	**0396-7015-60-07**
800	31.5	**0396-7015-80-07**
1,000	39.37	**0396-7015-10-07**

Diagram pockets 3080

Product Description
Can be fastened to the perforated door frame either at the right or left side
With cut-outs for attachment of a diskette box

Technical Data
- Material: 18 ga sheet steel, Painted, RAL 7035
- Surface finish: Powder coated RAL 7035

Further technical information ➜ below

Scope of Delivery
- 1 piece with mounting hardware

Dimensions		Order No.
mm	inch	
300 x 260 x 60	11.81 x 10.24 x 2.36	**3080-7114-42-07**
300 x 260 x 90	11.81 x 10.24 x 3.54	**3080-7115-40-07**

Technical Information

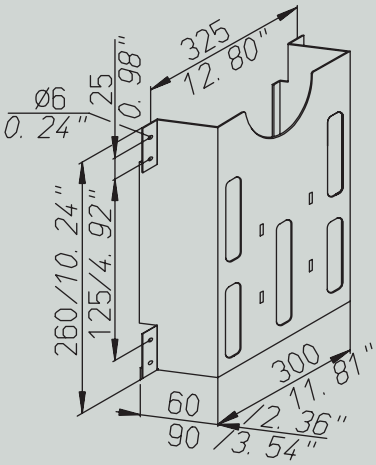

häwa

Combination work plate/diagram pocket

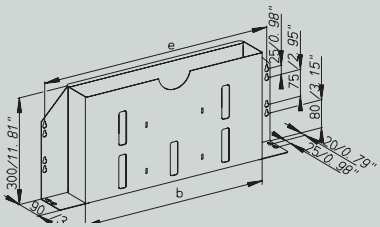

Product Description
Can be used as work plate or diagram pocket
When used as a work plate, disconnect diagram pocket, rotate 90° and re-connect. The diagram pocket remains accessible and now serves as a writing surface.

Technical Data
- Material: 18 ga sheet steel, Painted, RAL 7035
- Surface finish: Powder coated RAL 7035

Scope of Delivery
- 1 piece with mounting hardware

Hole dimension (a)		Dimensions		suitable for width		**Order No.**
mm	inch	mm	inch	mm	inch	
487	19.17	348	13.7	600	23.62	**0396-7114-60-07**
687	27.05	548	21.57	800	31.5	**0396-7114-80-07**
887	34.92	748	29.45	1,000	39.37	**0396-7114-10-07**
287	11.3	257	10.12	800	31.5	**0396-7114-40-07**
487	19.17	348	13.7	1,200	47.24	**0396-7114-60-07**

Diskette box / CD-box

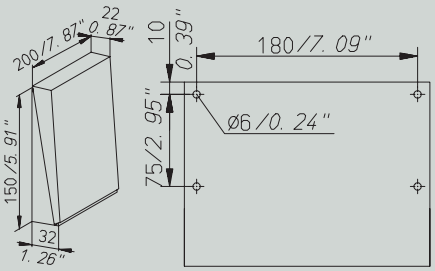

Product Description
- For increased EMI/RFI-shielding
- For diskette and CD storage
- Can be clipped onto the diagram pocket
- For srew mounting

Technical Data
- Dimensions: 200 x 150 x 32 mm; 7.87 x 5.91 x 1.26 inch
- Material: 18 ga sheet steel, Painted, RAL 7035
- Surface finish: Powder coated RAL 7035

Scope of Delivery
- 1 piece with mounting hardware

Note
Only in combination with Combination work plate and diagram pocket.

Order No.
3080-7015-00-07

Top panel bolts

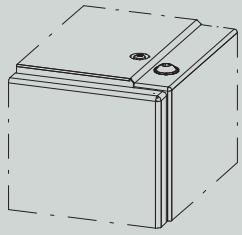

Features
- for H390/H395

Product Description
Replace lifting eyes

Technical Data
- Thread: M 12 x 25
- Surface finish: galvanized and blue chrome-plated

Scope of Delivery
- 1 set = 20 bolts

Order No.
3003-9000-12-25

Top panel bolts

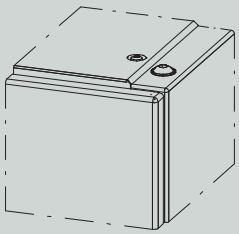

Features
- for H390/H395

Product Description
Replace lifting eyes

Technical Data
- Thread: M 12 x 25
- Surface finish: galvanized and blue chrome-plated

Scope of Delivery
- 1 set = 20 bolts

Order No.
3003-9000-12-25

Spacer bolts for top panels

Product Description
They are needed when the top cable entry plate is raised for roof ventilation

Technical Data
- Length: 20 mm
- Surface finish: galvanized and blue chrome-plated

Scope of Delivery
- 1 set = 8 pieces with nut

Order No.
0396-7018-02-00

Hexagon head screw DIN 933

Technical Data
- DIN 7500
- Material: steel

Scope of Delivery
- 1 set = 100 pieces

Dimension	Order No.
M 6 x 12	**0348-7500-06-12**
M 8 x 16	**3003-9500-08-16**

Self-tapping screw 5x10

Product Description
self-tapping

Technical Data
- Dimension: M 5 x 10
- Material: steel

suitable for
Attachment bar for interior side of doors and Cable support rail

Order No.
3011-9010-75-16

häwa

Attachment screw

Product Description
thread-rolling

Technical Data
- DIN 7500
- Dimension: M 5 x 12
- Material: steel
- Surface finish: galvanized and blue chrome-plated

Scope of Delivery
- 1 set = 100 pieces

Order No.
0348-7500-05-12

Mounting screw DIN84

Product Description
M 6x14 DIN 84

Technical Data
- DIN 84
- Material: steel

Scope of Delivery
- 1 set = 100 pieces

Note
Fits sliders (M6x14) and adapter flanges (M4x8)

Dimension	Order No.
M 4 x 8	**3055-9084-04-08**
M 6 x 14	**3055-9084-06-14**

Hexagon head screw DIN 933

Technical Data
- DIN 933
- Dimension: M6x12
- Material: A2

Scope of Delivery
- 1 set = 100 pieces

Order No.
3005-9933-06-12

Hex-nut Verbus-Tensilock

Product Description
Sperrzahnmuttern zur Verwendung ohne U-Scheibe.

Technical Data
- DIN 7500
- Material: steel
- Surface finish: galvanized and blue chrome-plated

Scope of Delivery
- 1 set = 100 pieces

Dimension	Order No.
M 6	**3003-9500-06-00**
M 8	**3003-9500-08-00**

Safety nut DIN 6923, M6

Technical Data
- DIN 6923

Scope of Delivery
- 1 Satz = 100 Stück

suitable for
Base lateral rail 0376

	Order No.
	3005-9002-06-00

Tipping cage nuts

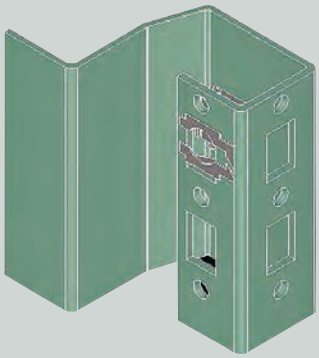

Product Description
Nuts can be inserted from the front.
Tools are not required for mounting.
Can be used for attaching all accessories to the perforated cabinet frame.

Technical Data
- Material: steel

Further technical information ➜ page 186

Scope of Delivery
- 1 set = 100 pieces

Note
For bolting of all accessory parts to the continuous tubular frame in the modular cabinets H375/H395, and the vertical and horizontal mounting rails in the free-standing cabinets H370/H390.

		Order No.
	M 6	**2070-7202-06-00**
	M 8	**2070-7202-08-00**

Technical Information

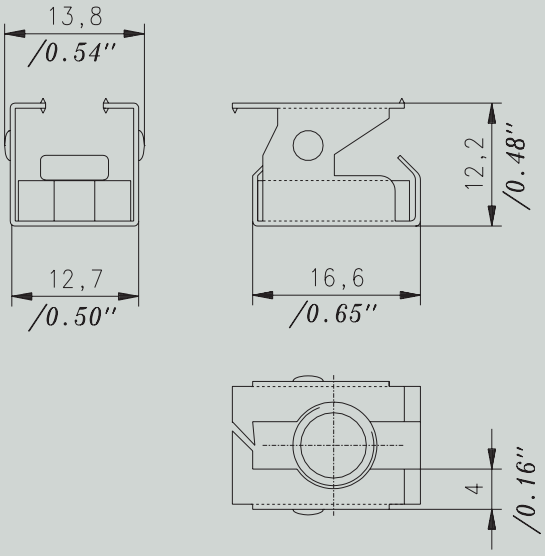

häwa

Clip-nuts

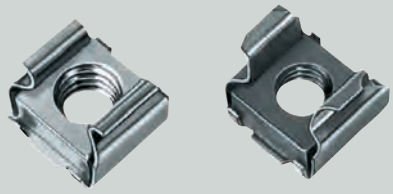

Technical Data
- Mounting cut out 9,0 oder 9,5 mm²

Scope of Delivery
- 1 set = 100 pieces

Accessories
- Hex-nut Verbus-Tensilock ➜ page 183

Thread	for sheet metal thickness mm	Order No. without grounding tips	Order No. with grounding tips
M 4	0,7-1,7	2070-9102-34-00	
M 5	0,7-1,7	2070-9102-35-00	
M 5	1,8-2,6	2070-9102-35-02	
M 6	0,7-1,7	2070-9102-36-00	
M 6	2,7-3,5	2070-9102-36-03	
M 6	1,8-2,6	2070-9102-36-02	
M 5	1,5-2,0		2070-9102-45-00
M 6	1,5-2,0		2070-9102-46-03
M 6	2,5-3,5		2070-9102-46-00

Insertion tool for clip-nuts

Order No.
2070-0003-48-00

Mounting brackets for mounting plate

Product Description
For assembly of mounting plates in häwa cabinets

Technical Data
- Material: steel

Order No.
3080-7111-91-06

Mounting kit for partial mounting plate to center attachment rails

Technical Data
- Material: steel

Scope of Delivery
- 1 set

Order No.
3080-7111-92-06

Slides 3062

Technical Data
- Surface finish: Sheet steel, galvanized and blue chromeplated

Scope of Delivery
- 1 set = 100 pieces

Dimension	Order No.
M 6	**3062-9113-06-00**
M 6	**3062-9112-06-00**

Technical Information

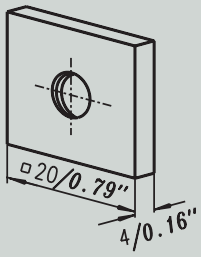

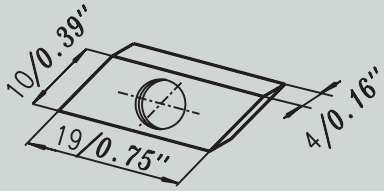

Slides 3061

Technical Data
Material: Plastic (Polyamide) with threaded steel insert

Scope of Delivery
- 1 set = 100 pieces

Dimension	suitable for	Order No.
M 6	Mounting rail, Support rail and Equipment rail	**3061-9012-06-00**

Technical Information

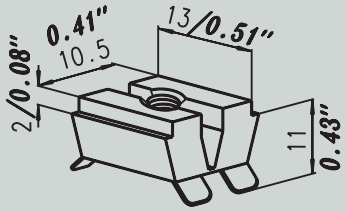

Attachment brackets 3062

Features
- For mounting the attachment rail 0362 to the cabinet frame

Product Description
For C-rail mounting

Technical Data
- Surface finish: Galvanized and blue chrone-plated

Scope of Delivery
- 1 set = 4 pieces with hardware

suitable for
Attachment rail

Order No.
3062-7005-46-03

häwa

Mounting brackets for cable support rail

Features
- Flexible mounting of cable support rails in cabinet or 200 mm high base.

Technical Data
- Surface finish: Galvanized and blue chrone-plated

suitable for
Cable support rail

Accessories
- Hexagon head screw Verbus-Tensilock ➜ below
- Hex-nut Verbus-Tensilock ➜ below

	Order No.
	0396-7082-00-03

Accessories

Hexagon head screw Verbus-Tensilock Details ➜ page 182

		Material	Order No.
	M 8 x 16	steel	**3003-9500-08-16**

Hex-nut Verbus-Tensilock Details ➜ page 183

	Description	Material	Order No.
	Self-locking nuts for use without washer	steel	**3003-9500-08-00**

Configuration rails

Technical Data
- Material: Steel
- Surface finish: galvanized

Scope of Delivery
- 1 set = 2 rails

suitable for depth		Order No.
mm	inch	
600	23,62	**0396-7014-60-01**
800	31,5	**0396-7014-80-01**

Cable entry plate with brushes

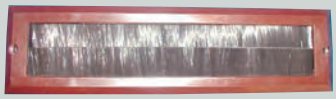

Product Description
for subsequent mounting on PC-Cabinet base

Technical Data
- Dimension: 310x84x12 mm
- plastic: brown

Scope of Delivery
- 1 cable entry plate

	Order No.
	0396-7310-84-00

Joining brackets

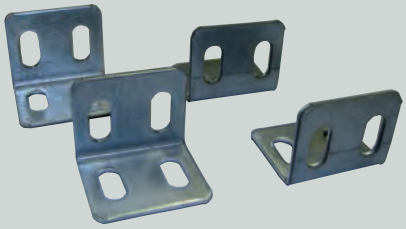

Product Description
Brackets for joining adjacent modular cabinets.

Technical Data
- Material: 11 ga sheet steel

Scope of Delivery
- 1 set = 4 pieces without mounting hardware

Note
The rubber gasket part-no. 3080-0102-18-00 must be ordered separately.

Fits modular cabinets, cabinets for plug mounting, covering cabinets, and distribution cabinets. Always use with mounting plates in rearmost position. In combination with joining flange adaptor also recommended for the transport of heavy cabinets.

Accessories
- Tipping-cage nuts ➜ below
- Hexagon head screw Verbus-Tensilock ➜ below

	Order No.
	0396-0010-00-00

Accessories

Tipping cage nuts Details ➜ **page 184**

	Description		Order No.
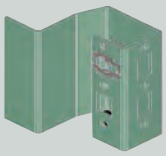	**Nuts can be inserted from the front.** **Tools are not required for mounting.**	M 8	**2070-7202-08-00**

Hexagon head screw Verbus-Tensilock Details ➜ **page 182**

	Beschreibung		Order No.
	Self-locking nuts for use without washer	M 8 x 16	**3003-9500-08-16**

Joining flange adaptor

Product Description
For modular cabinet assembly.

Technical Data
- Material: 11 ga sheet steel

Scope of Delivery
- 1 joining flange adaptor without mounting hardware.

Note
The rubber gasket part-no. 3080-0102-18-00 must be ordered separately.

Fits modular cabinets, cabinets for plug mounting, covering cabinets, and distribution cabinets.
Always use with mounting plates in rearmost position. In combination with joining flange adaptor also recommended for the transport of heavy cabinets.

Accessories
- Tipping-cage nuts ➜ below
- Hexagon head screw Verbus-Tensilock ➜ page 189

	Order No.
	0396-0012-00-00

Tipping cage nuts Details ➜ **page 184**

	Description		Order No.
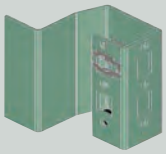	**Nuts can be inserted from the front.** **Tools are not required for mounting.**	M 8	**2070-7202-08-00**

Hexagon head screw Verbus-Tensilock Details ➜ **page 182**

	Beschreibung		Art. Nr.
	Self-locking screw for use without washer	M 8 x 16	**3003-9500-08-16**

Connector set

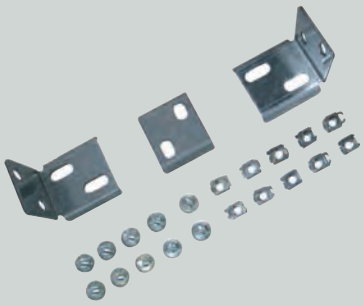

Product Description
For modular installation of cabinets

Scope of Delivery
- A. 1 x flange brackets
- B. 2 x corner connector with mounting hardware
- two sets are required for each joint

Note
The rubber gasket part-no. 3080-0102-18-00 must be ordered separately.
Fits modular cabinets, cabinets for plug mounting, covering cabinets, and distribution cabinets. Always use with mounting plates in rearmost position. In combination with joining flange adaptor also recommended for the transport of heavy cabinets.

Order No.
0396-7032-01-43

Connector set Standard

Product Description
For modular installation of cabinets

Scope of Delivery
- 6

Note
The rubber gasket part-no. 3080-0102-18-00 must be ordered separately.

Fits modular cabinets, cabinets for plug mounting, covering cabinets, and distribution cabinets. Always use with mounting plates in rearmost position. In combination with joining flange adaptor also recommended for the transport of heavy cabinets.

Order No.
0396-7002-00-43
0376-7002-00-43

Connector set for partition panels

Product Description
Mounting brackets for installation of partition panels in-between two modular cabinets. Also operates as joining brackets for modular installation.

Technical Data
- Surface finish: Galvanized

Scope of Delivery
- 12 brackets with mounting hardware

Note
The rubber gasket part-no. 3080-0102-18-00 must be ordered separately. Fits modular cabinets, cabinets for plug mounting, covering cabinets, and distribution cabinets. For transporting the Connector set, Standard is required.

Order No.
0396-7033-01-63

Adapter flanges

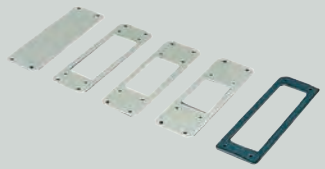

Features
- for panels with plug cut-out

Product Description
Reduction pieces for the respective plug connectors. For mounting over the pre-cut openings.

Technical Data
- Material: 14 ga steel
- Surface finish: Galvanized

Further technical information ➜ below

Scope of Delivery
- 1 piece with gasket

suitable for
Panels with plug cut-outs

Accessories
- Mounting srew ➜ below

	Version	Pos	Order No.
	24 to16 pol.	1	**3080-9104-10-00**
	24 to 10 pol.	2	**3080-9104-20-00**
	24 to 6 pol.	3	**3080-9104-30-00**
	blank	4	**3080-9104-40-00**

Technical Information

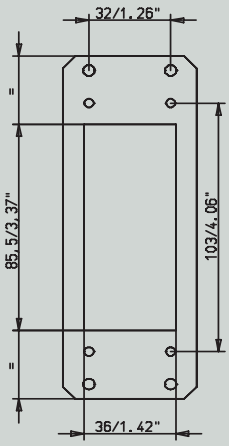

Pos. 1

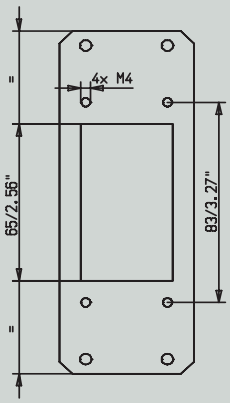

Pos. 2

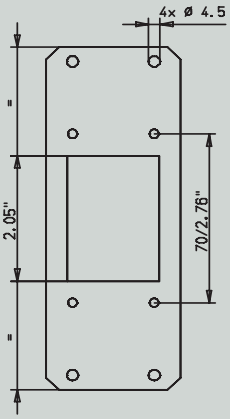

Pos. 3

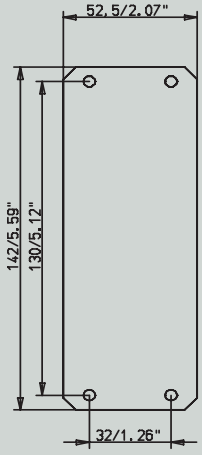

Pos. 4

Accessories

Mouning srew Details ➜ **page 183**

	Description	Order No.
	M 6x14 DIN 84	**3055-9084-04-08**

Door opening limiter

Product Description
- Assembly to perforated rails of cabinets and tubular frame of door.
- Opening angle adjustable through adequate installation in door frame

Technical Data
- Material: Sheet steel

Scope of Delivery
- 1 door opening limiter

	Order No.
	3080-7109-87-00

Locking bolt

Product Description
Cabinets are equipped with one 0.12" double-mandrel lock DIN 43668. These locks can easily be changed to other lock types by replacing the locking bolt.

Technical Data
Further technical information ➜ page 192

Scope of Delivery
- 1 piece

Order No.		
Doppelbart 5 mm	8 mm 4 Kant	7 mm 4 Kant
3070-0308-18-00	3070-0308-13-00	3070-0308-12-00

Technical Information

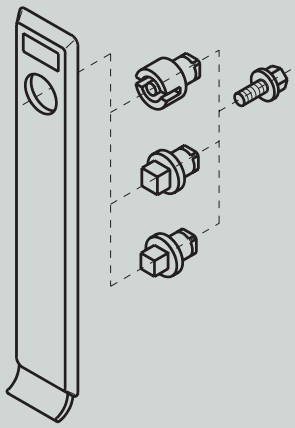

Narrow swing handle

Product Description
For recessed installation in cabinet doors
Prepared for installation of an elongated barrel to DIN 18252, length 1.57" or for up to 0.196" protruding barrel.
- Can be used at right or left.

Technical Data
- Color: black with häwa logo

Scope of Delivery
- 1 piece complete with seals and mounting hardware

Order No.
3070-0904-50-01
3070-0904-55-01

Polyamide swing handle

Product Description
Installs in place of standard lock system (no drilling, simple installation)
- Operates on right or left side
- sealed with barrel cover

Technical Data
- Color: black with häwa logo

Scope of Delivery
- 1 piece complete with seals and mounting hardware

Order No.
3070-0907-92-01
3070-0907-95-01

Wing handle black, right locking

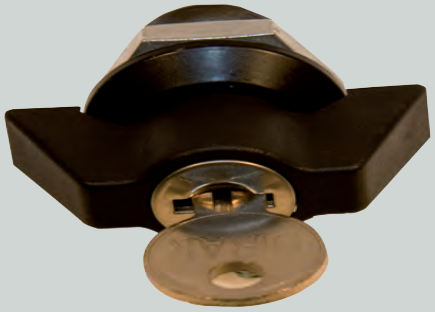

Features
- locking of viewing covers type 0371

Product Description
- Lock for right locking version
- For left locking installation: change orientation of latch
- 90° quarter turn
- Key removable in both positions

Technical Data
- Material: Plastic, black

Scope of Delivery
- 1 wing handle, 2 nuts
- 2 keys

Note
Latch is included in scope of delivery of viewing cover type 0371

	Order No.
	3070-7347-92-00

Elongated barrel

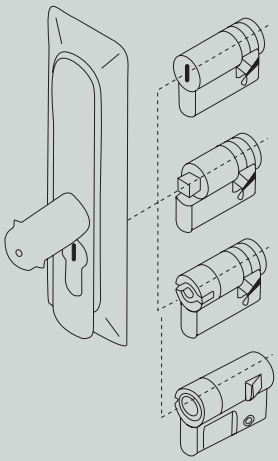

Product Description
For swing handles
Automatic catching

Technical Data
- Surface finish:
  GD Zn chromeplated or MS nickel-plated

Further technical information ➜ below

Scope of Delivery
- 1 Elongated barrel

Note
Other lock mechanisms on request. Suitable for swing handle 3070-0904 and 3070-0907.

Description	Lock type	Type	Order No.
Elongated barrel	Nr. 1333/333	A	**3070-0933-34-00**
	Nr. 333 7 mm 4-kant 8 mm 4-kant 3 mm Doppelbart 5 mm Doppelbart Daimler Benz	B	**3070-0933-30-00** **3070-0900-12-00** **3070-0900-13-00** **3070-0900-14-00** **3070-0900-18-00** **3070-0900-16-00**
push-button operation	DO205	C	**3070-0902-05-00**
Polyamide dummy			**3070-0900-10-00**

Technical Information

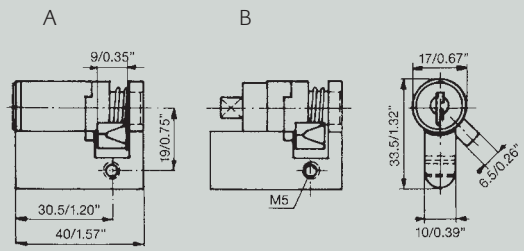

häwa

180°-Hinges

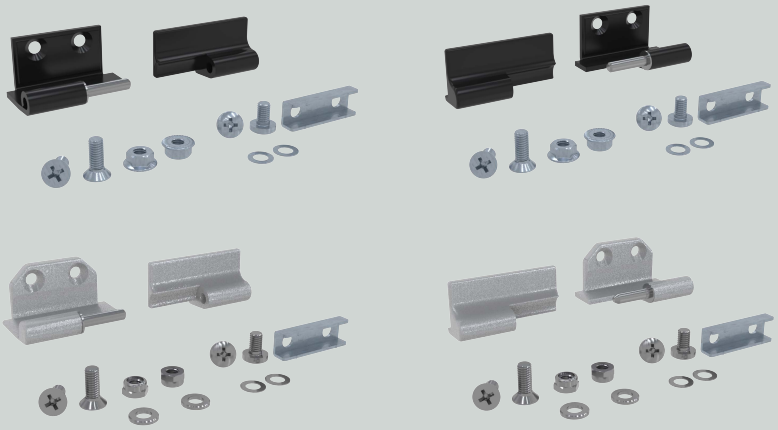

Product Description

External hinges increase the door opening angle of cabinets from 120° to 180°.

Scope of Delivery

- 1 hinge with mounting hardware
- The drilling template has to be ordered separately.

Accessories

- Drilling template ➜ below

suitable for	Hinges right	Hinges left
H370/H375	3080-7218-95-15	3080-7218-95-25
H390/H395	3080-7218-95-10	3080-7218-95-20

Drilling template

suitable for

180° Hinges

	Order No.
	3080-7218-00-01

Filter pads

Scope of Delivery

- 6 filter pads

suitable for	Order No.
Bases height: 100 mm for cabinets H390, H395 and PC2096	**0346-8000-00-01**
Bases height 200 mm for cabinets H390 and H395	**0346-8000-00-02**

Installation kit for mounting distribution cabinets

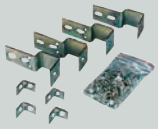

Product Description

To secure mounting frames IVS of the following manufacturers in häwa cabinets:

- ABN-May & Steffens
- Klöckner-Moeller
- Striebel & John
- Vynckier
- Hager

Technical Data

Further technical information ➜ below

Scope of Delivery

- 1 set complete consisting of 4 brackets and mounting hardware.
- Mounting set for Hager system = 2 mountings brackets suitable for cabinet width

Note

Variable mounting depth

suitable for width		Order No.
mm	inch	
		0394-7004-02-00
600	23.62	**0394-7000-60-07**
850	33.46	**0394-7000-85-07**
1,100	43.31	**0394-7000-11-07**
600	23.62	**0395-7004-60-00**
850	33.46	**0394-7004-85-00**
1,100	43.31	**0394-7004-11-00**

Technical Information

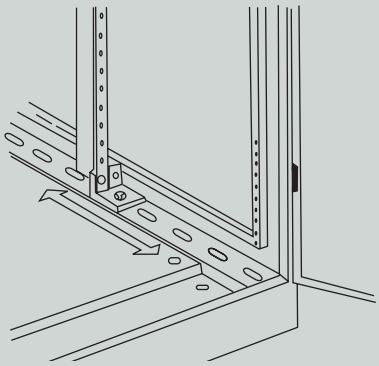

häwa

Cover set for mounting in distribution cabinets

Product Description

The cover set inside the cabinet (containing one left, right, top and bottom cover) protects against accidental contact of live components. Suitable for covering at a pitch dimension of 9.84".

Top and bottom cover can be inclined thereby, the cover set can be used for all systems.

Technical Data

- Material: 16 ga sheet steel

Further technical information ➜ below

Scope of Delivery

- 1 cover set consisting of 2 lateral covers, 1 top cover, 1 bottom cover and mounting hardware

suitable for width		Dimension LW		**Order No.**
mm	inch	mm	inch	
600	23.62	520	20.47	**0394-7120-60-07**
850	33.46	770	30.31	**0394-7120-85-07**
1,100	43.31	1,020	40.16	**0394-7120-11-07**

Technical Information

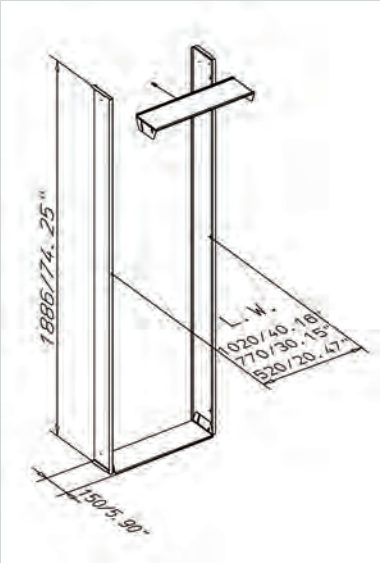

Side panel for H450

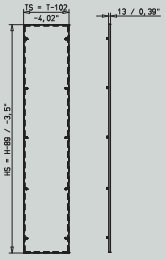

Features
- For installation of outward side panels of RHL cabinet

Product Description
- Side panel out of two pieces (inner and outer sheet)
- Grounding per DIN 60439-1, grounding studs M8x20
- With continuous foamed gasket and U-profile gasket (EPDM)

Technical Data
- Material: Stainless steel No. 1.4301
- Surface finish: Brushed, 240 grit

Scope of Delivery
- 1 set Side panels and mounting hardware

Dimensions		suitable for height		suitable for depth		**Order No.**
mm	inch	mm	inch	mm	inch	
1,511 x 298	59.49 x 11.73	1,600	62.99	400	15.75	**0456-7016-40-61**
1,711 x 298	67.36 x 11.73	1,800	70.87	400	15.75	**0456-7018-40-61**
1,911 x 298	75.24 x 11.73	2,000	78.74	400	15.75	**0456-7020-40-61**
1,511 x 398	59.49 x 15.67	1,600	62.99	500	19.69	**0456-7016-50-61**
1,711 x 398	67.36 x 15.67	1,800	70.87	500	19.69	**0456-7018-50-61**
1,911 x 398	75.24 x 15.67	2,000	78.74	600	23.62	**0456-7016-60-61**

7.87“ high base

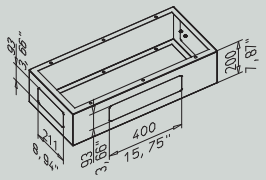

Product Description
- Sides and fronts with cable entry plates, secured from inside.
- For modular assembly.

Technical Data
- Surface finish: Brushed, 240 grit

Scope of Delivery
- Base with mounting hardware

suitable for width		suitable for depth		**Order No.**
mm	inch	mm	inch	
600	23.62	400	15.75	**0456-6002-40-11**
800	31.5	400	15.75	**0456-8002-40-11**
1,000	39.37	400	15.75	**0456-1002-40-11**
1,200	47.24	400	15.75	**0456-1202-40-11**
600	23.62	500	19.69	**0456-6002-50-11**
800	31.5	500	19.69	**0456-8002-50-11**
1,000	39.37	500	19.69	**0456-1002-50-11**
1,200	47.24	500	19.69	**0456-1202-50-11**
600	23.62	600	23.62	**0456-6002-60-11**
800	31.5	600	23.62	**0456-8002-60-11**
1,000	39.37	600	23.62	**0456-1002-60-11**
1,200	47.24	600	23.62	**0456-1202-60-11**

häwa

Flange element

Product Description
For securing cabinet frames.
Assures secure and stable connection.

Scope of Delivery
- 1 set = 3 pieces

Order No.
0346-7032-01-43

Mounting plate

Features
- adjustable in depth
- häwa „click“

Technical Data
- Ground connection provided
- Material: Sheet steel
- Surface finish: Galvanized

Scope of Delivery
- Mouning plate complete with mounting hardware

Note
For assembly in rearmost position attachment bracket 0396-0010-00-00/0012-00 or assembly connection set 0396-7032-01-43 should be used. For additional locking of mounting plates at lower attachment brackets or center attachment rails, please use hexagon head screws Verbus-Tensilock M8.

Dimensions		Metal thickness Mounting plate		suitable for width		suitable for height		Order No.
mm	inch	mm	ga	mm	inch	mm	inch	
316 x 1,680	12.44 x 66.14			400	15.75	1,800	70.87	**0348-4018-00-13**
316 x 1,880	12.44 x 74.02			400	15.75	2,000	78.74	**0348-4020-00-13**
516 x 1,480	20.31 x 58.27	2.5	12	600	23.62	1,600	62.99	**0348-6016-00-13**
516 x 1,680	20.31 x 66.14	2.5	12	600	23.62	1,800	70.87	**0348-6018-00-13**
516 x 1,880	20.31 x 74.02	2.5	12	600	23.62	2,000	78.74	**0348-6020-00-13**
516 x 2,080	20.31 x 81.89	2.5	12	600	23.62	2,200	86.61	**0348-6022-00-13**
716 x 1,480	28.19 x 58.27	2.5	12	800	31.5	1,600	62.99	**0348-8016-00-13**
716 x 1,680	28.19 x 66.14	2.5	12	800	31.5	1,800	70.87	**0348-8018-00-13**
716 x 1,880	28.19 x 74.02	2.5	12	800	31.5	2,000	78.74	**0348-8020-00-13**
716 x 2,080	28.19 x 81.89	2.5	12	800	31.5	2,200	86.61	**0348-8022-00-13**
916 x 1,480	36.06 x 58.27	3	11	1,000	39.37	1,600	62.99	**0348-1016-00-13**
916 x 1,680	36.06 x 66.14	3	11	1,000	39.37	1,800	70.87	**0348-1018-00-13**
916 x 2,080	36.06 x 81.89	3	11	1,000	39.37	2,200	86.61	**0348-1022-00-13**
916 x 1,880	36.06 x 74.02	3	11	1,000	39.37	2,000	78.74	**0348-1020-00-13**
1,116 x 1,480	43.94 x 58.27	3	11	1,200	47.24	1,600	62.99	**0348-1216-00-13**
1,116 x 1,680	43.94 x 66.14	3	11	1,200	47.24	1,800	70.87	**0348-1218-00-13**
1,116 x 1,880	43.94 x 74.02	3	11	1,200	47.24	2,000	78.74	**0348-1220-00-13**
1,916 x 1,880	75.43 x 74.02	3	11	2,000	78.74	2,000	78.74	**0348-2020-00-13**

Base for PC-Cabinet

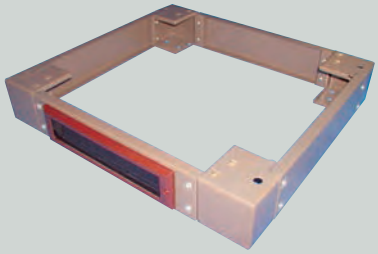

Features
- For free-standing single and ganged-together modular cabinets
- High lifting capacity

Product Description
All panels are detachable, one panel with cable entry and brush strip
- Bases for installation under construction

Technical Data
- Dimension: 600 x 100 x 550 mm; 23,62 x 3,94 x 21,65 inch
- Material: 14 ga steel
- Surface finish: Powder coated RAL 7035

Scope of Delivery
- unassembled
- incl. Mounting hardware

Suitable for
- Passend für Breite: 600 mm; 23,62 inch
- Passend für Tiefe: 625 mm; 24,61 inch

Note
Sockel dieser Bauart passen auch an H390/ H395 Schränke mit B-600, T-600.

	Order No.
	0396.6001.60.27

Base

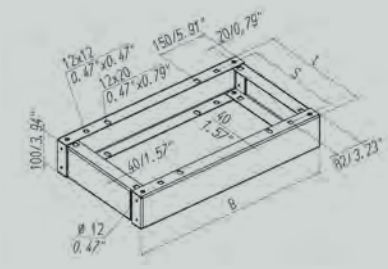

Features
- For free-standing single and ganged-together modular cabinets
- High lifting capacity

Technical Data
- Dimension s: 505 mm
- Dimension: 600 x 100 x 550 mm; 23,62 x 3,94 x 21,65 inch
- Material: 14 ga steel
- Surface finish: Powder coated RAL 7035

Scope of Delivery
- Complete base unassembled with mounting hardware

Suitable for
- suitable for width: 600 mm; 23,62 inch
- suitable for depth: 625 mm; 24,61 inch

	Order No.
	0396-6001-60-17

häwa

Intermediate shelves-fixed

Technical Data
- Hole dimension (a): 495 mm; 19.49 inch
- Mounting surface: 533 x 444 mm; 20.98 x 17.48 inch
- Material: 14 ga steel
- Surface finish: Powder coated RAL 7035

suitable for
- suitable for width: 600 mm; 23.62 inch
- suitable for depth: 600 mm; 23.62 inch

Note
The configuration rails are required to tilt the shelf. The vertical assembly rails are only required for installation in H370 and H390 cabinets.

Order No.
2010-7266-44-17

19“-Intermediate shelves-fixed

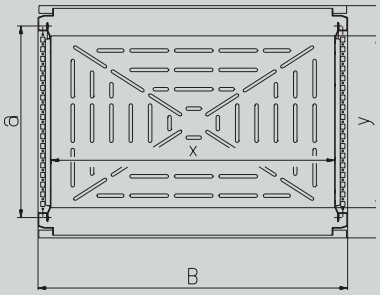

Product Description
Assembled with clip nuts and bolts. The fixes shelf ist simply placed onto the bolts and secured. Slots in the shelves aid air movement and help prevent heat build up.

Technical Data
- Load capacity: 50 kg
- Height: 25 mm
- Dimension cut-out (a): 386 mm; 15,2 inch
- Mounting surface (XxY): 462 x 444 mm; 18,19 x 17,48 inch
- Material: 14 ga steel
- Surface finish: Powder coated RAL 7035

Scope of Delivery
- Intermediate shelf with mounting hardware

Suitable for
- suitable for width: 600 mm; 23,62 inch
- suitable for depth: 625 mm; 24,61 inch

Order No.
2010-7263-44-17

Extendable shelf

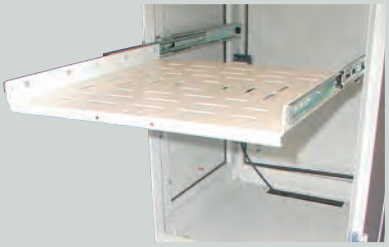

Product Description
For mounting to cabinet posts.

Technical Data
- Load capacity: max. 45 kg
- Heigth: 66 mm
- Extendable length: 508 mm
- Mounting surface (WidhtxDepth): 488 x 500 mm; 19,21 x 19,69 inch
- Material: 14 ga steel
- Surface finish: Powder coated RAL 7035

Scope of Delivery
- Extendable shelf with telescoping rails and mounting hardware

Suitable for
- suitable for width: 600 mm; 23,62 inch
- suitable for depth: 625 mm; 24,61 inch

Order No.
0396-4566-55-17

Extendable shelf for heavy loads

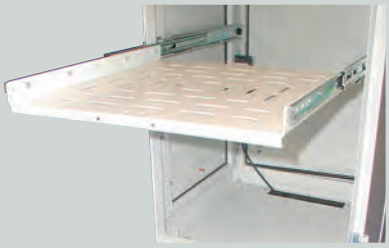

Product Description
For mounting to cabinet posts.

Technical Data
- Load capacity: max. 68 kg
- Height: 66 mm
- Extension length: 530 mm
- Material: 14 ga sheet steel
- Surface finish: Powder coated RAL 7035

Scope of Delivery
- Shelf with telescoping rails and mounting hardware

Suitable for
- Width: 600 mm; 23,62 inch
- Depth: 625 mm; 24,61 inch

	Order No.
	0396-6866-55-17

Extendable equipment drawer, two tiers

Features
- Optimum utilization of PC-cabinet 2096 height

Product Description
For PC, printers, etc.
max. dimensions W x H x D:
- 2 pc. PC-towers: 200 x 450 x 460 mm plus plug
- 1 pc. printer: 390 x 350 x 460 mm plus plug

For mounting to cabinet bars

Technical Data
- Load capacity: max. 60 kg
- Heigth: 534 mm, Width: 550 mm, Depth: 500 mm
- Extension length: 530 mm
- Usable surface area (WidthxDepth): 488,5 x 500 mm; 19,23 x 19,69 inch
- Material: 14 ga sheet steel
- Surface finish: Powder coated RAL 7035

Scope of Delivery
- 2 tier shelves with support frame, telescoping rails and mounting hardware

Suitable for
- Width: 600 mm; 23,62 inch
- Depth: 625 mm; 24,61 inch

	Order No.
	0396-6866-55-27

19“-Galvanized notched support rails, 18 U

Features
- Notched support rails are used for the installation of sub-racks to DIN 41494 and EIA for 23.62“ width cabinet

Product Description
The rails are resettable and can be permanently mounted to dimension „A“ of the slide rails.
mounted to the lower part of the PC-cabinet type 2096.

Technical Data
- HE/U 18
- Material: 16 ga sheet steel
- Surface finish: Galvanized and blue chrone-plated

Scope of Delivery
- 1 set = 2 notches support rails, 2 U-section rails with mounting hardware

Note
The support rails are attached at the center

Accessoreies
- Center attachment ➜ page 201

	Order No.
	0396-7900-18-73

häwa

Accessories

Center attachment Details ➜ **page 140**

Description	Hole dimension (a)		length		suitable for depth		Order No.
	mm	inch	mm	inch	mm	inch	
For attachment of mounting plates, swing frames, partial mounting plates etc.	495	19.49	542	21.34	600	23.62	**0396-0003-60-05**

Slide rails 19“

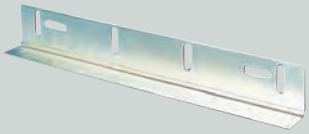

Technical Data

- Material: 16 ga sheet steel
- Surface finish: Galvanized and blue chrone-plated

Further technical information ➜ below

Hole dimension (a)		length		Order No.
mm	inch	mm	inch	
186	7.32	235	9.25	**2070-7046-01-86**
286	11.26	335	13.19	**2070-7046-02-86**
386	15.2			**2070-7046-03-86**
486	19.13	535	21.06	**2070-7046-04-86**

Technical Information

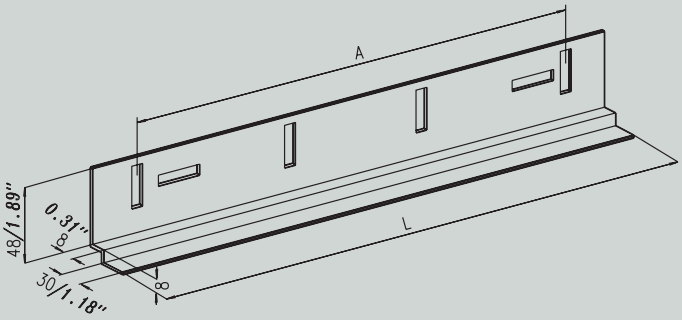

Roof-mounted ventilator complete

Product Description

For removal of heat through top of cabinet

- Use of radial fan guarantees extremely high air flow
- Air exhausts to all 4 sides

Technical Data

- Fan motor unimpeded air flow: 430m³/h
- used in combination with inlet filter: 300 m³/h
- Max. impact pressure 220 Pa
- Noise level 55dB (A)
- Temperature range: -30...+55 °C
- Licences fan motor VDE, EN 60335-1
- Motor connection: Plug terminal
- Insulation class B
- Nominal voltage 230V, 50/60 Hz
- Power consumption 70 W
- Protection class IP 43
- Material: Motor housing: Sheet steel 16 ga
- Surface finish: Powder coated RAL 7035

Scope of Delivery

- Roof-mounted ventilator complete

Order No.
3148-0300-02-27

Roof-cover without ventilator

Technical Data

- Material: Sheet steel 16ga
- Surface finish: Powder coated RAL 7035

Scope of Delivery

- Roof-cover with mounting hardware

Order No.
3148-0300-00-07

Technical Information

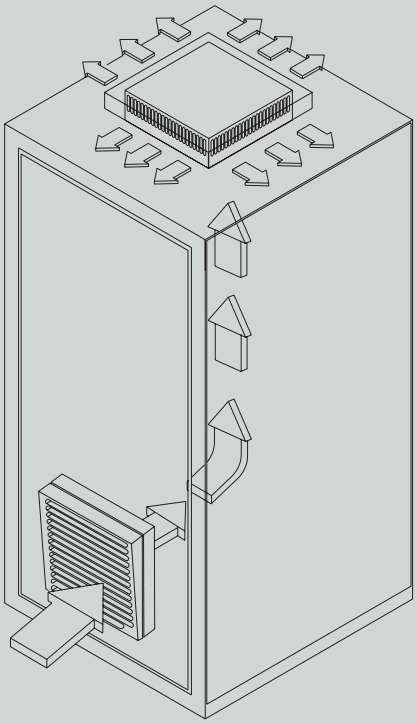

häwa

Fan rack for air circulation with three fans

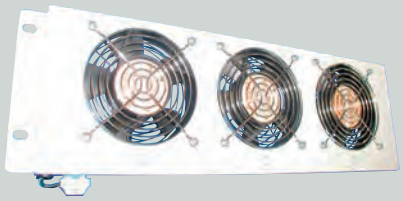

Product Description
ready for connection, premounted, with 2 m power cable. For side mounting in PC-cabinets type 2096.

Technical Data
- Dimension: 519 x 145 x 25 mm; 20,43 x 5,71 x 0,98 inch
- Material: 14 ga sheet steel
- Surface finish: Powder coated RAL 7035

Scope of Delivery
- 1 fan rack with three fans, ready for connection, with mounting hardware
- power cable

Suitable for
- Depth: 625 mm; 24,61 inch

Accessories
- Power cable ➜ below
- Tamperproof Thermostats FTS ➜ below

	Order No.
	3114-9119-60-37

Accessories

Power cable Details ➜ **page 207**

Description	Order No.
for fan rack	3093-0000-03-00

Tamperproof Thermostats FTS Details ➜ Thermal Components

Description	Order No.
for fan rack	3150-4050-00-00
	3150-4060-00-00
	3150-4035-00-00

Pre-wired fan rack

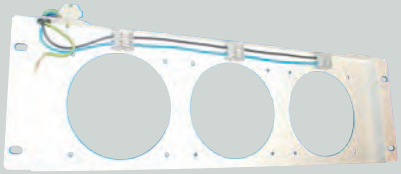

Product Description
for mounting up to three fans.
For side mounting in PC cabinets type 2096

Technical Data
- Dimension: 519 x 145 x 20 mm; 20,43 x 5,71 x 0,79 inch
- Material: 14 ga sheet steel
- Surface finish: Powder coated RAL 7035

Scope of Delivery
- 1 Pre-wired fan rack with mounting hardware

Suitable for
- Depth: 625 mm; 24,61 inch

Accessories
- Fan ➜ page 204
- Power cable ➜ page 204

	Order No.
	3114-9119-60-07

Accessories

Fan Details ➜ **below**

	Description	Order No.
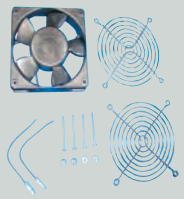	**suitable for fan rack, with two protection screens**	**3114-9119-25-23**

Power cable Details ➜ **unten**

	Description	Order No.
	for fan rack	**3140-0000-02-00**

Fan

Product Description
- suitable for fan rack,
- with two protection screens

Technical Data
- 180 m³/h, 230V freiblasend

Scope of Delivery
- 1 fan with protection screen
  2 power cable and mounting hardware

	Order No.
	3114-9119-25-23

Power cable

Product Description
- for fan rack

Technical Data
- Länge 2 m , 3 x 1,0²
- H05VV-F 36, 3-adrig

Scope of Delivery
- 1 power cable

	Order No.
	3140-0000-02-00

häwa

Connection terminal strip

Product Description
for PC-cabinet type 2096 for power input, consisting of rail 1.4“- 0.30“ and terminal 4 mm2.
For mounting to cabinet base.

Scope of Delivery
- 1 terminal strip with terminal

Order No.
3093-0000-03-00

Grounding cable set

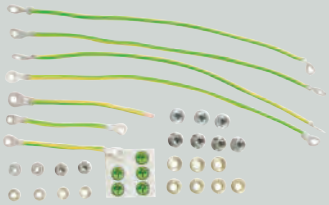

Technical Data
- H07V-K, 6 mm ^{2}, green/yellow

Scope of Delivery
- 7 grounding cable and mounting hardware

Order No.
3080-9036-20-96

Outlet strips

Product Description
Housing made of high quality aluminum, with safety receptacles per DIN 49440, 250V, 16A

Technical Data
- with 2 m power cord, H05VV-F3G 1.5 mm^2.
- reconnectable, 45° arrangement,
- dark gray finish, similar to RAL 7016
- 4 sockets

Scope of Delivery
- Outlet strips with 2 support brackets and mounting hardware

Order No.
9000-9004-03-51

Spacer bolts for top panels

Product Description
They are used if the top cable entry plate is raised for roof ventilation.

Technical Data
- Length 0.79“, with two attachment brackets
- Surface finish: galvanized

Scope of Delivery
- 1 set = 8 pcs. spacer bolts and U-washers

Order No.
0396-7018-02-00

Top panels with rubber clamping

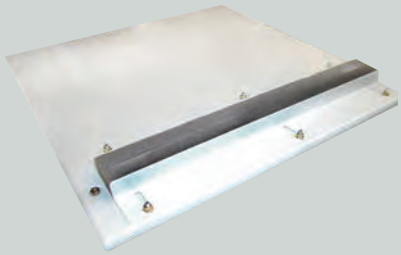

Features
- flexible cable entry for PC 2096

Product Description
They can be mounted instead of the installed top cable entry plates, providing an easy cable entry into the cabinet
Also suitable for cabinets H395, H390: B x T 600 x 600 mm

Technical Data
- Material: sheet steel
- Surface finish: Powder coated RAL 7035

Scope of Delivery
- 1 top panel with mounting hardware

Suitable for:
- widht: 600 mm; 23,62 inch
- depth: 625 mm; 24,61 inch

Order No.
0396-7060-62-77

Top panels with brushes

Features
- flexible cable entry for PC 2096

Product Description
Two brush strips provide easy cable entry and dust protection.
Also suitable for cabinets H395, H390: B x T 600 x 600 mm

Technical Data
- Material: sheet steel
- Surface finish: Powder coated RAL 7035

Scope of Delivery
- 1 Top panel with mounting hardware

Suitable for:
- widht: 600 mm; 23,62 inch
- depth: 625 mm; 24,61 inch

Order No.
0396-7060-62-47

Lever grip

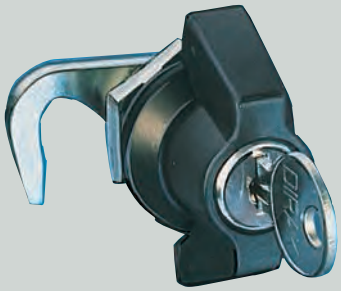

Features
- Lockable front lock for PC cabinet 2096

Product Description
- lock nut
- with lock barrel
- for exchange with the upper lever grip of front door

right or left locking

Technical Data
- Material: Lever; polyamide plastic; nut + screw: galvanized steel; housing: zinc diecasting

Scope of Delivery
- 1 Lever grip with two keys

Note
The lever of the original lock is to be used

Order No.
3070-7502-13-30

häwa

Replacement keys for Lock type 1333

Product Description
for barrel locks PC-Cabinets

Technical Data
- Material: steel

Surface finish: chrome-plated

Scope of Delivery
- 1 Stück

Order No.
3070-0130-00-00

Frontal trim

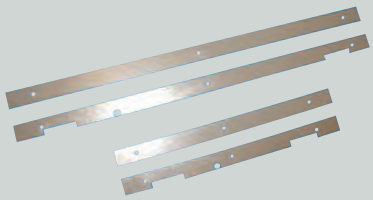

Product Description
for PC-Cabinet type 2096

Technical Data
- Material: 14 ga sheet steel

Scope of Delivery
- 4 Frontal trim

Note
Plus, if custom colors are available upon request please say so.

suitable for type	RAL	Order No.
H-1600	7030 stone grey	**2096-0001-70-30**
H-1600	5015 sky blue	**2096-0001-50-15**
H-1600	3020 traffic red	**2096-0001-30-20**
H-1600	7022 umbra grey	**2096-0001-70-22**
H-1800	7030 stone grey	**2096-0002-70-30**
H-1800	5015 sky blue	**2096-0002-50-15**
H-1800	3020 traffic red	**2096-0002-30-20**
H-1800	7022 umbra grey	**2096-0002-70-22**

Printer rack

Product Description
Suitable for extendable intermediate shelves from cabinet depth 23.62" = 600 mm

Technical Data
- Dimension: 495 x 477 x 425 mm; 19,49 x 18,78 x 16,73 inch
- Material: sheet steel
- Surface finish: Powder coated RAL 7035

Scope of Delivery
- 1 Printer rack

Order No.
2035-0240-01-07

Bases height 3.94“ for Consoles

Features
- For free-standing single and ganged-together modular cabinets
- Rugged U-profiles
- High lifting capacity

Product Description
Base for installation under cabinets. Excellent surface finish protection with improved pretreatment of the sheet metals by iron phosphatization and chrome-free repassivation as well as pollution free powder coating.

Technical Data
- Material: 14 ga steel
- Surface finish: Powder coated RAL 7022

Scope of Delivery
- Base complete, unassembled, with assembly and mounting hardware

Suitable for typ	Width		Dimension t		Dimension cut-out (S)		**Order No.**
	mm	inch	mm	inch	mm	inch	
H122, H123	600	23,62	262	10,31	217	8,54	**0346-6001-26-17**
H122	700	27,56	262	10,31	217	8,54	**0346-7001-26-17**
H122, H123, H124	800	31,5	262	10,31	217	8,54	**0346-8001-26-17**
H122, H123	1.000	39,37	262	10,31	217	8,54	**0346-1001-26-17**
H122, H123, H124	1.200	47,24	262	10,31	217	8,54	**0346-1201-26-17**
H122, H123, H124	1.600	62,99	262	10,31	217	8,54	**0346-1601-26-17**
H122, H124	2.000	78,74	262	10,31	217	8,54	**0346-2001-26-17**
H121, 2026	580	22,83	350	13,78	303	11,93	**0346-5801-35-17**
H121, 2026	1.090	42,91	350	13,78	303	11,93	**0346-1101-35-17**
H121, 2026	1.600	62,99	350	13,78	303	11,93	**0346-1601-35-17**
SNP	600	23,62	380	14,96	335	13,19	**0346-6001-40-17**
SNP	800	31,5	380	14,96	335	13,19	**0346-8001-40-17**
SNP	1.000	39,37	380	14,96	335	13,19	**0346-1001-40-17**
H122	800	31,5	480	18,9	435	17,13	**0346-8001-50-17**
H122	1.000	39,37	480	18,9	435	17,13	**0346-1001-50-17**
H122	1.200	47,24	480	18,9	435	17,13	**0346-1201-50-17**
H122	1.600	62,99	480	18,9	435	17,13	**0346-1601-50-17**

häwa

Bases height 7.87“ for SNP-Consoles

Features
- High lifting capacity

Product Description
- Base for installation under cabinets.
- Excellent surface finish protection with improved pretreatment of the sheet metals by iron phosphatization and chrome-free repassivation as well as pollution free powder coating.

Technical Data
- Mounting holes: Ø 0.47“ in top and bottom, for attachment to console or base
- Dimension cut-out (S): 335 mm; 13,19 inch
- Material: 14 ga sheet steel
- Surface finish: Powder coated RAL 7022
- Dimension t: 380 mm; 14,96 inch

Scope of Delivery
- Base complete, unassembled, with assembly and mounting hardware

Suitable for Width		Suitable for Depth		**Order No.**
mm	inch	mm	inch	
600	23,62	400	15,75	**0346-6002-40-07**
800	31,5	400	15,75	**0346-8002-40-07**
1.000	39,37	400	15,75	**0346-1002-40-07**

Front panels

Product Description
All versions with cut edges

Technical Data
- Material: AL Mg 3 hh or transparent
- Surface finish: Alu: a) bright with protective film suitable for anodizing, b) anodized with protective film
  uonc-die casting
  Intermediate piece, aluminum alloy polished silk matt anodized

Scope of Delivery
- Front panel with 2 handles and mounting hardware

HE/U	Dimension		Dimension Cut-out Front panel (e)		Dimension Front panel (a)		**Order No.**		
	mm	inch	mm	inch	mm	inch	bright	anodized	transparent
HE/U 3	132,5	5,22	57,1	2,25	92,5	3,64	2056-7003-00-01		2056-7003-00-00
HE/U 4	177	6,97	101,6	4	137	5,39	2056-7004-00-01	2056-7004-00-04	2056-7004-00-00
HE/U 5	221,4	8,72	146	5,75	181,5	7,15	2056-7005-00-01	2056-7005-00-04	2056-7005-00-00
HE/U 6	265,9	10,47	190,4	7,5	226	8,9	2056-7006-00-01	2056-7006-00-04	2056-7006-00-00
HE/U 7	310,3	12,22	234,9	9,25	270,5	10,65	2056-7007-00-01		2056-7007-00-00
HE/U 8	354,8	13,97	279	10,98	314,5	12,38	2056-7008-00-01		2056-7008-00-00

Dummy panels

Product Description
All versions with cut edges

Technical Data
- Material: AL Mg 3 hh or transparent
- Surface finish:

a) bright with protective film suitable for anodized
b) anodized with protective film

Scope of Delivery
- Dummy panel with mounting hardware

HE/U	Dimension		Dimension Cut-out Front panel (e)		**Order No.**		
	mm	inch	mm	inch	bright	anodized	transparent
HE/U 1	43,6	1,72	31,7	1,25	2057-7001-00-01	2057-7001-00-04	2057-7001-00-00
HE/U 2	88,1	3,47	76,2	3	2057-7002-00-01	2057-7002-00-04	
HE/U 3	132,5	5,22	57,1	2,25	2057-7003-00-01	2057-7003-00-04	2057-7003-00-00
HE/U 4	177	6,97	101,6	4	2057-7004-00-01	2057-7004-00-04	
HE/U 5	221,4	8,72	146	5,75	2057-7005-00-01	2057-7005-00-04	2057-7005-00-00
HE/U 6	265,9	10,47	190,4	7,5	2057-7006-00-01	2057-7006-00-04	2057-7006-00-00
HE/U 7	310,3	12,22	234,9	9,25	2057-7007-00-01		2057-7007-00-00
HE/U 8	354,8	13,97	279	10,98	2057-7008-00-01	2057-7008-00-04	2057-7008-00-00
HE/U 9	399,2	15,72	323,8	12,75	2057-7009-00-01	2057-7009-00-04	2057-7009-00-00
HE/U 10	443,7	17,47	368,3	14,5	2057-7010-00-01	2057-7010-00-04	
HE/U 12	532,6	20,97	457,1	18	2057-7012-00-01	2057-7012-00-04	2057-7012-00-00

Mounting plate 0320 for H122 and H123 Consoles

Technical Data
- Erdung vorhanden
- Material: Steel
- Surface finish: galvanized

Scope of Delivery
- 1 Mounting plate with mounting hardware

Suitable for Depth		**Order No.**
mm	inch	
600	23,62	**0320-0060-72-13**
700	27,56	**0320-0070-72-13**
800	31,5	**0320-0080-72-13**
1.000	39,37	**0320-0010-72-13**
1.200	47,24	**0320-0012-72-13**
1.600	62,99	**0320-0016-72-13**
2.000	78,74	**0320-0020-72-13**

häwa

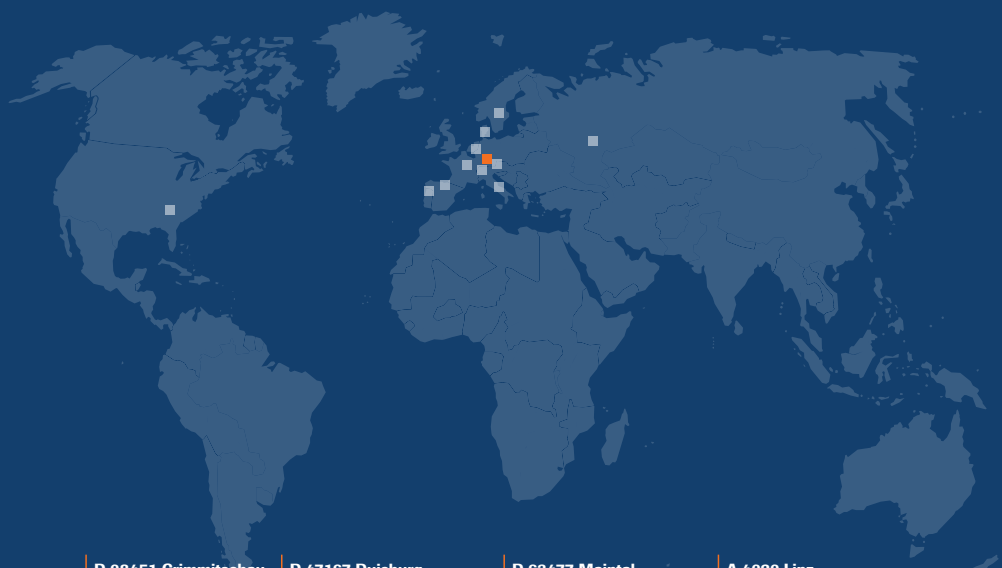

häwa GmbH
Industriestraße 12
D 88489 Wain
Tel. +49 7353 98460
Fax +49 7353 1050
info@haewa.de
www.haewa.de

D 08451 Crimmitschau

Sachsenweg 3
Tel. +49 3762 95271/2
Fax +49 3762 95278
vertrieb.c@haewa.de

D 47167 Duisburg
Gewerbegebiet Neumühl

Theodor-Heuss-Str. 128
Tel. +49 203 346530
Fax +49 203 589785
vertrieb.d@haewa.de

D 63477 Maintal
Dörnigheim

Carl-Zeiss-Straße 7
Tel. +49 6181 493031
Fax +49 6181 494003
vertrieb.rm@haewa.de

A 4020 Linz

Schmachtl GmbH
Pummererstraße 36
Tel. +43 732 76460
Fax: +43 732 785036
office.linz@schmachtl.at

CH 8967 Widen

häwa (Schweiz) ag
Gyrenstrasse 5a
Tel. +41 43 3662222
Fax +41 43 3662233
info@haewa.ch

DK 6400 Sonderborg

Eegholm A/S
Grundtvigs Allé 165 - 169
Tel. +45 73 121212
Fax: +4573 121213
eegholm@eegholm.dk

E 48450 Etxebarri

hawea ibérica, s.l.
Poligono Leguizamón
Calle Guipuzcoa, Pab.9
Tel. +34 944 269521
Fax: +34 944 261087
hawea@ctv.es

F 67600 Sélestat

häwa France Sarl
22, Rue Roswag
Tel. +33 6 72713309
info@haewa.fr

I 88489 Wain

häwa Italia
Industriestraße 12
Tel. +49 7353 9846115
Fax +49 7353 1050
info@haewa.it

NL 7500 AC Enschede

häwa Nederland B.V.
Postbus 136
Tel. +31 53 4321835
Fax +31 53 4303414
info@haewa.nl

SE 88489 Wain

häwa Schweden
Industriestraße 12
Tel. +49 7353 98460
Fax +49 7353 1050
info@haewa.se

SE 192 79 Sollentua
(only for tools)

Nelco Contact AB
Bergkällawägen 29
Tel. + 46 8 7547040
Fax +46 8 7548051
info@nelco.se

USA Duluth, GA 30097

haewa Corporation
3768 Peachtree Crest Drive
Tel. +1 770 9213272
Fax +1 770 9212896
info@haewa.com

RUS 88489 Wain

häwa Russland
Industriestraße 12
Tel. +49 7353 9846 169
Fax +49 7353 1050
edgar.getz@haewa.de

© häwa, 01/2021

CABINET SYSTEMS
X-FRAME
ENCLOSURES
ACCESSORIES
CLIMATE CONTROL
CABLE DUCTS
CUSTOMIZED SOLUTIONS
TOOLS